In-Position Technologies

aerospace
climate control
electromechanical
filtration
fluid & gas handling
hydraulics
pneumatics
process control
sealing & shielding

Linear Motors

I-Force Ironless and RIPPED Ironcore Series

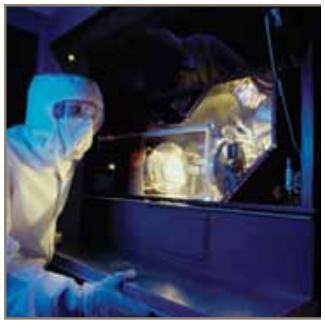

Parker

ENGINEERING YOUR SUCCESS.

I-Force and Ironcore Linear Motors

Parker Hannifin has been providing innovative automation solutions for decades. This spirit of innovation continues within the exploding market of linear motor technology.

In 2003, Parker acquired Trilogy Corporation, one of the most recognized brands in linear motors. The powerful combination of Parker's and Trilogy's patented linear motor solutions gives automation and robotics customers distinct performance enhancements and cost of ownership benefits over competing technologies.

With a full complement of linear motor components and fully engineered positioning systems, Parker has the right solution to increase productivity and to enhance the accuracy and dynamic performance of your machine.

Parker has one of the broadest offerings in available linear motor technologies. From component or "kit" style motors, packaged positioning tables, to complete custom engineered systems, Parker can provide a solution for any linear motion requirement. This document focuses on Parker's two families of component-style motors. Typical applications for Parker linear motor products include:

- **Semiconductor and electronics**
- **Flat panels, solar panels**
- **Medical and life sciences**
- **Machine tools**
- **Optics and photonics**
- **Large format printing, scanning and digital fabrication**

Linear Motor Design Benefits

- **High speeds**
- **High accelerations**
- **Fast response – 100 times that of a mechanical system**
- **Stiffness – spring rate better than a mechanical system**
- **Zero backlash – direct drive technology**
- **Maintenance free operation – mechanical simplicity due to reduced component count**
- **Long travels without performance loss**
- **Suitable for vacuum and extreme environments**

Linear Motor Advantages

A linear motor operates in exactly the same way as a rotary motor that has been "unwrapped." The same electromagnetic effects that produce torque in a rotary motor now produce a direct force in a linear motor.

For many applications, linear motors offer distinct advantages over conventional rotary drive systems. For example, there is no need to couple the motor to the load by means of intermediate mechanical components such as gears, ballscrews, or belt drives. The load is directly connected to the motor.

Therefore, there is no backlash or elasticity from the moving elements. Thus, the dynamic behavior of the servo control is improved and higher levels of accuracy are achieved.

The absence of a mechanical transmission component also results in a drive system with low inertia and noise. In addition, mechanical wear only occurs in the guidance system. Consequently, linear motors have better reliability and lower frictional losses than traditional rotary drive systems.

I-Force Ironless Motors

Page 4 – 33

- **Five track sizes**
- **Forces to 3928 N (883 lbs)**
- **Unlimited lengths**
- **Ultra high performance**
- **Zero cogging**

RIPPED Ironcore Motors

Page 34 – 42

- **3 track sizes**
- **Forces to 7433 N (1671 lbs)**
- **Unlimited lengths**
- **Highest power per package size**

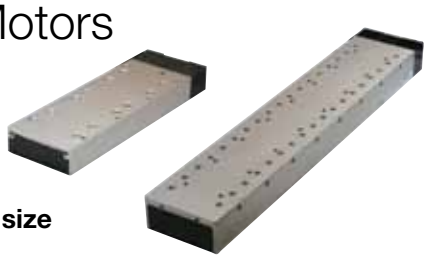

For information on Parker's extensive line of linear motor positioner products including industrial-grade, precision-grade, multi-axis systems and custom capabilities, please visit our website at **www.parkermotion.com**

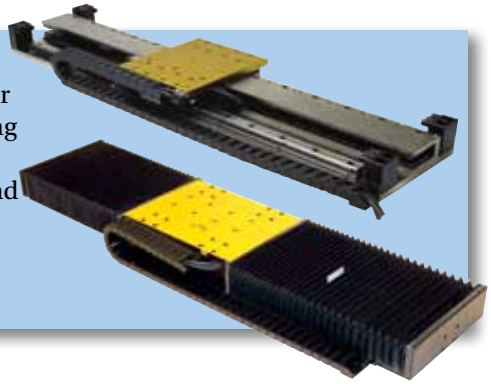

Design Engineering with Linear Motors

Component linear motors such as the I-Force and Ironcore consist of a motor coil and separate magnet track.

The coil assembly is known as the "forcer" or sometimes as the "primary" element. The forcer generally consists of the motor coil and an attachment plate or mounting bar which allows the coil to connect to the carriage. The motor cables typically exit from one side of the package.

The magnet track is sometimes referred to as the "secondary" element. Depending on the type of linear motor used, the magnet track can either be a single row of magnets or a double-sided configuration offering balanced attraction forces.

The ability to select linear motor components gives the user an economical solution and complete flexibility with respect to integration into the machine. However, this flexibility also requires an understanding of motor characteristics, linear feedback technology, cooling methods, and the performance of the servo amplifier and control system.

- **Let Parker's extensive motion design experience, systematic project management process, and global infrastructure solve your most demanding motion problems**
- **Collaborative development cycle aligns customer goals and rigorous performance specifications with a complete engineered solution**

Please contact Parker application engineering if you need any assistance with your design.

I-Force Ironless Linear Motors

Parker's I-Force Ironless Linear Motors offer high forces and rapid accelerations in a compact package. With forces ranging from 24.5 N (5.5 lbf) to 878.6 N (197.5 lbf) continuous up to 108.5 N (24.5 lbf) to 3928 N (883 lbf) peak, the I-Force family offers a superior combination of performance and size.

The I-Force patented I-beam shape with its overlapping windings allows for a higher power density in a smaller motor, improved heat removal, and added structural stiffness.

In addition, the ironless (or air core) linear motor design has no attractive force toward the magnets. This allows for easy installation and zero cogging during motion.

Ultra high-flex cables come standard with I-Force motors. In addition, Parker offers modular magnet tracks for unrestricted travel length. Incredibly smooth motion, high precision and high force density make the I-Force linear motors an ideal solution for your demanding positioning requirements.

No attractive force toward the magnets

- **Easier/Safer assembly and handling, smoother travel (no cogging)**

Overlapping windings

- **Increased force density**
- **Improved heat dissipation**
- **Lower temperature rise**
- **Smaller, less expensive motor**

Overlapped windings

Non-overlapped windings

Uses thermally conductive epoxy together with the windings

- **Patented ironless motors design (RE34674) provides better heat dissipation**

Vacuum encapsulation process

- **Allows motors to be used in high-vacuum environments**
- **Rated at 10^{-6} torr, currently used in 10^{-7} torr applications**

Modular magnet track

- **Precision ground 3-piece track**
- **Unrestricted travel length**
- **Two lengths of modular magnet tracks allow unlimited length of travel**

Embedded overtemp thermostat or optional thermistor

- **Protects windings against overheating**
- **Prealigned imbedded digital Hall effect devices**
- **Internal thermal cutout switch protects coil**

Ultra high-flex cables

- **Longer cable life, good for millions of cycles**

Ironless Advantages

- **No attractive force – balanced dual magnet track, safe and easy to handle, no force to deal with during assembly**
- **No cogging – ironless forcer for zero cogging and ultimate smoothness.**
- **Low weight forcer – no iron means higher acceleration and deceleration rates, higher mechanical bandwidth.**
- **Air gap forgiving – easy to align and install**

Disadvantages Compared to Ironcore

- **Heat dissipation – higher thermal resistance, patented Parker I-beam design helps mitigate this issue (see below)**
- **Lower RMS power when compared to ironcore designs.**
- **Uses twice as many magnets which increases unit cost**

I-Force Patented I-Beam Design

Ironless motors consist of a forcer (windings), which rides between dual magnet rails.

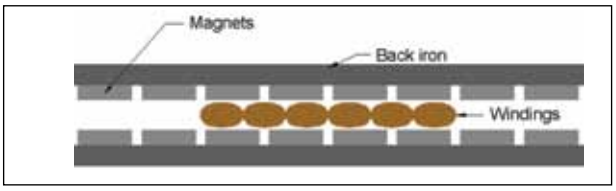

The forcer does not have any iron laminations in the coil – hence the name ironless. Instead, the copper windings are encapsulated and located in the air gap between the two rows of magnets. Because the motors are ironless, there are no attractive forces or cogging forces between the forcer and the magnet track.

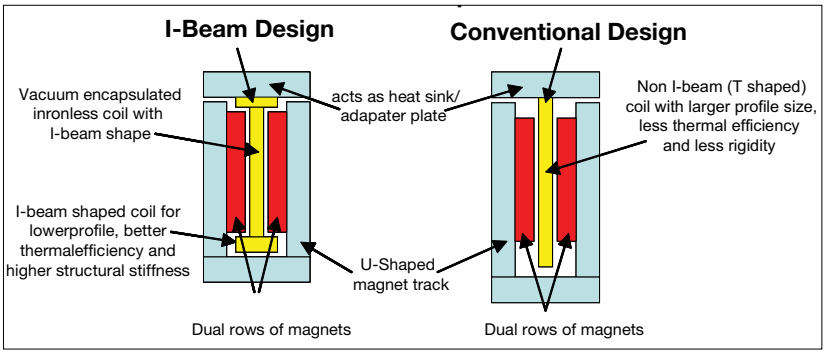

Parker's patented I-beam shape provides very high forces in a compact package. In addition, the design is more thermally efficient than tradition ironless motor designs.

The ironless forcers have lower mass than their ironcore counterparts resulting in extremely high accelerations and overall dynamic performance. The ironless design has zero cogging and the lack of attractive force allows for extended bearing life and, in some applications, the ability to use smaller bearings.

While the high dynamic performance and zero cogging motion make the ironless motors a powerful design, they are not as thermally efficient as their ironcore counterparts. A small contacting surface area and a long thermal path from the winding base to the cooling plate makes the full-load power of these motors low. In addition, the dual row of magnets increases the overall cost of these motors in relation to the generated force and stroke length.

I-Force Ironless Motor Selection

Model	110	210	310	410	ML-50
Page	6	12	18	24	30
Cross Section – H x W mm (in)	50 x 21 (2.05 x 0.82)	57.1 x 31.7 (2.25 x 1.25)	86.4 x 34.3 (3.40 x 1.35)	114.3 x 50.8 (4.50 x 2.00)	155 x 50 (6.10 x 1.97)
Continuous Force – N (lbs)	44 (10)	104.5 (24.8)	262 (58)	878 (197)	852 (191)
Peak Force – N (lbs)	200 (45)	494 (110)	1170 (263)	3928 (883)	3811 (856)
Maximum Track Length – mm (in)					
Modular	Unlimited	Unlimited	Unlimited	Unlimited	Unlimited
Single Piece	914 (36)	1219 (48)	1676 (66)	1829 (72)	240 (9.45)
Cooling[1]	—	Internal air cooling manifold available	Internal air cooling manifold or liquid cooling available	Internal air cooling manifold or liquid cooling available	—
Digital Hall Effect Devices	None, Imbedded	None, Imbedded	None, Imbedded	None, Imbedded	HED sensors and overtravel limit are available in connector module

[1] Consult factory for cooling performance

I-Force Ironless 110 Series

Performance

Model	Units	110-1	110-2
Peak Force [1]	N (lb)	108.5 (24.4)	202.5 (45.5)
Continuous Force [2]	N (lb)	24.5 (5.5)	45.4 (10.2)
Peak Power	W	938	1641
Continuous Power	W	47	82

1) Peak force and current based on 5% duty cycle and one second duration.
2) Continuous force and current based on coil winding temperature maintained at 100 ºC.

Electrical

Model	Units	110-1		110-2		
Winding	Series/Parallel/Triple	**S**	**P**	**S**	**P**	**T**
Peak Current	A pk sine	15.9	31.8	14.8	29.6	44.4
	RMS	11.2	22.5	10.4	20.9	31.4
Continuous Current	A pk sine	3.6	7.2	3.3	6.6	9.9
	RMS	2.5	5.1	2.3	4.7	7.1
Force Constant [1]	N/A peak	6.8	3.4	13.7	6.8	4.6
	lb/A peak	1.5	0.8	3.1	1.5	1.0
Back EMF [2]	V/m/s	7.9	3.9	15.7	7.9	5.2
	V/in/s	0.20	0.10	0.40	0.20	0.13
Resistance @ 25°C (phase-to-phase) [3]	ohms	3.8	0.95	7.6	1.9	0.84
Inductance (phase-to-phase) [4]	mH	1.0	0.3	2.0	0.5	0.2
Electrical Time Constant [5]	ms	0.3	0.3	0.3	0.3	0.3
Motor Constant [6]	N/W	3.56	3.56	5.02	5.02	5.02
	lb/W	0.80	0.80	1.13	1.13	1.13
Terminal Voltage (max.) [7]	VDC	330	330	330	330	330

1) Force constant is peak of resistive force produced by 1.0 amp thru one motor lead and 0.5 amps thru other two leads.
Also, Back EMF (V/in/sec) * 7.665 = Force constant (lb/amp).
2) Back EMF measured between any two motor leads while moving at constant velocity. Value is amplitude or 0-Peak of sine wave produced.
3) Resistance measured between any two motor leads with motor connected in Delta winding at 25 ºC. For temperature at 100 ºC, multiply resistance by 1.295 (75 ºC rise * 0.393%/ºC).
4) Inductance measured using 1 Kz with the motor in the magnetic field.
5) Electrical time constant is time it takes for motor value to reach 63% of its final current after a step change in voltage.
6) Motor constant is a measure of efficiency. Calculated by dividing the force constant by the square root of the motor resistance at maximum operating temperature.
7) Consult factory for use with non-Parker amplifiers.

Thermal*

Model	Units	110-1	110-2
Thermal Resistance Wind-Amb	°C/W	1.59	0.92
Thermal Time Constant (min.) [1]		3.2	3.2
Maximum Winding Temperature [2]	°C	100	100

* Use Parker's MotionSizer software for the most accurate estimate of coil temperature for a particular motion profile.
1) Thermal time constant is time it takes for motor temperature to reach 63% of its final value after a step change in power.
2) Thermal resistance is the number of degrees (Celsius) of temperature rise in the winding per watt of power dissipated determined experimentally.

Mechanical

Model	Units	110-1	110-2
Coil Weight	kg (lb)	0.12 (0.27)	0.22 (0.48)
Coil Length	mm (in)	81.3 (3.20)	142.2 (5.60)
Attractive Force	N (lbf)	0	0
Electrical Cycle Length [1)]	mm (in)	60.96 (2.40)	60.96 (2.40)

1) Electrical cycle length is distance coil must travel to complete 360º electrical cycle.

Wiring Options

WD0

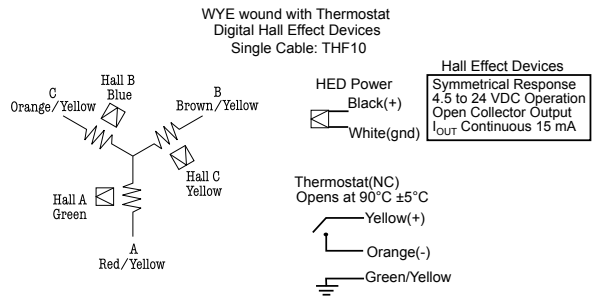

WD3 Preferred configuration with Parker Drives

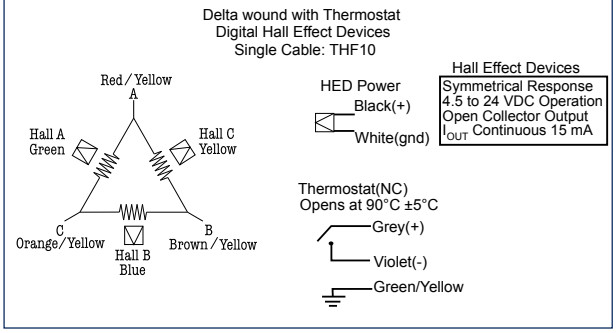

WD1

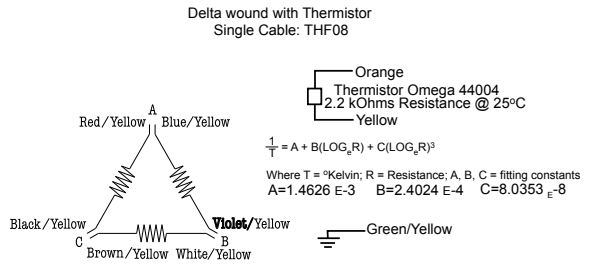

WD4

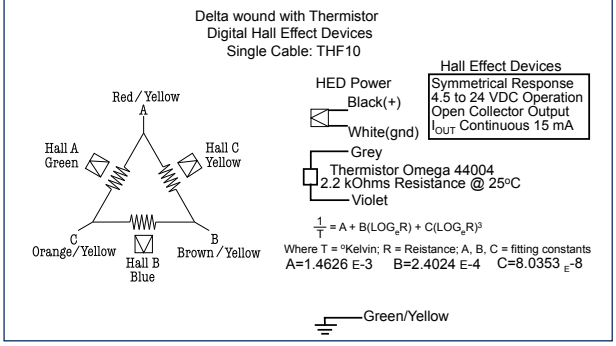

WD2

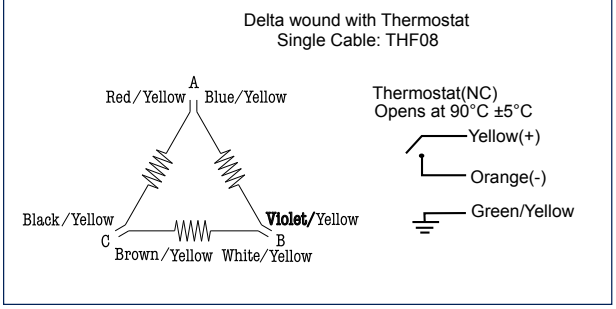

I-Force Ironless 110 Series

Magnet Track Specifications

110xxM Modular – mm (in)

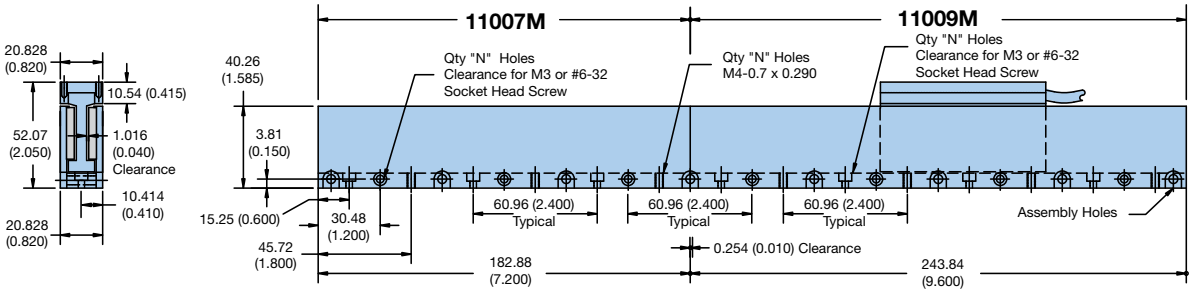

110xxM1 Modular – mm (in)

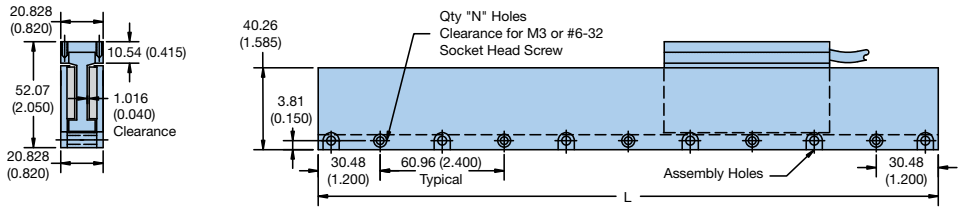

110xxS Single Piece – mm (in)

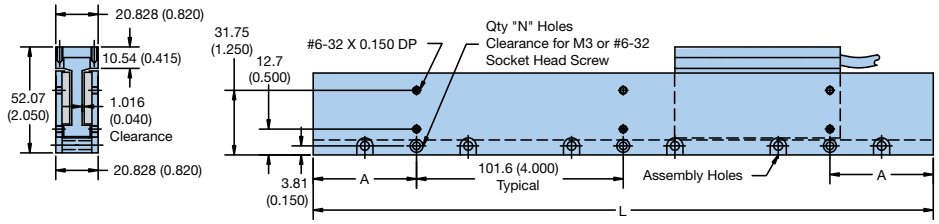

	110xxM Modular	110xxM1 Modular	110xxS Single Piece
Incremental Length – mm (in)	60.96 (2.4)	60.96 (2.4)	30.48 (1.2)
Minimum Length – mm (in)	121.92 (4.8)	121.92 (4.8)	213.4 (8.4)
Maximum Length – mm (in) (for single piece)	914.40 (36)	914.40 (36)	914.40 (36)
Weight – kg/m (lbs/ft)	3.89 (2.66)	3.89 (2.66)	3.89 (2.66)

110xxM and 110xxM1 Modular

Part Number	L mm	L in	N
11004M/M1	121.92	4.8	2
11007M/M1	182.88	7.2	3
11009M/M1	243.84	9.6	4
11012M/M1	304.80	12.0	5
11014M/M1	365.76	14.4	6
11016M/M1	426.72	16.8	7
11019M/M1	487.68	19.2	8
11021M/M1	548.64	21.6	9
11024M/M1	609.60	24.0	10
11026M/M1	670.56	26.4	11
11028M/M1	731.52	28.8	12
11031M/M1	792.48	31.2	13
11033M/M1	853.44	33.6	14
11036M/M1	914.40	36.0	15

Modular Track Combinations With 11007M/M1 and 11009M/M1 Sections

Length (L)*		Quantity	
mm	in	11007M/M1	11009M/M1
182.9	7.2	1	0
243.8	9.6	0	1
365.8	14.4	2	0
426.7	16.8	1	1
487.7	19.2	0	2
548.6	21.6	3	0
609.6	24.0	2	1
670.6	26.4	1	2
731.5	28.8	0	3
792.5	31.2	3	1
853.4	33.6	2	2
914.4	36.0	1	3
975.4	38.4	0	4
1036.3	40.8	3	2
1097.3	43.2	2	3
1158.2	45.6	1	4
1219.2	48.0	0	5
1280.2	50.4	3	3
1341.1	52.8	2	4
1402.1	55.2	1	5
1463.0	57.6	0	6
1524.0	60.0	3	4

*Length is unlimited by combining modular track sections.

110xxS Single Piece

Part Number	L mm	L in	A mm	A in	N
11008S	213.36	8.4	5.08	0.20	3
11009S	243.84	9.6	20.32	0.80	3
11010S	274.32	10.8	35.56	1.40	3
11012S	304.80	12.0	50.80	2.00	3
11013S	335.28	13.2	66.04	2.60	3
11014S	365.76	14.4	81.28	3.20	3
11015S	396.24	15.6	96.52	3.80	3
11016S	426.72	16.8	10.16	0.40	5
11018S	457.20	18.0	25.40	1.00	5
11019S	487.68	19.2	40.64	1.60	5
11020S	518.16	20.4	55.88	2.20	5
11021S	548.64	21.6	71.12	2.80	5
11022S	579.12	22.8	86.36	3.40	5
11024S	609.60	24.0	101.60	4.00	5
11025S	640.08	25.2	15.24	0.60	7
11026S	670.56	26.4	30.48	1.20	7
11027S	701.04	27.6	45.72	1.80	7
11028S	731.52	28.8	60.96	2.40	7
11030S	762.00	30.0	76.20	3.00	7
11031S	792.48	31.2	91.44	3.60	7
11032S	822.96	32.4	5.08	0.20	9
11033S	853.44	33.6	20.32	0.80	9
11034S	883.92	34.8	35.56	1.40	9
11036S	914.40	36.0	50.80	2.00	9

I-Force 110 Series

Coil Specifications

Imperial Mounting Options

Top Mounting (A)

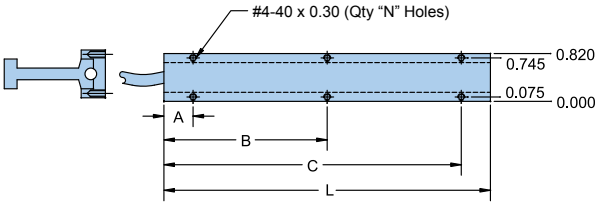

Coil Size/Mounting Code	Dimensions (in)				
	L	N	A	B	C
110-1A	3.20	4	0.50	2.70	—
110-2A	5.60	6	0.50	2.80	5.10

Side Mounting (B)

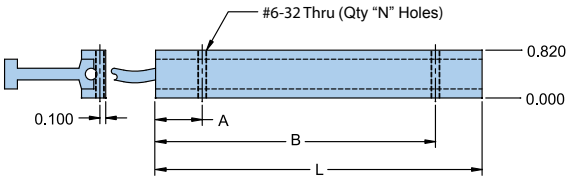

Coil Size/Mounting Code	Dimensions (in)			
	L	N	A	B
110-1B	3.20	2	0.80	2.40
110-2B	5.60	2	0.80	4.80

Metric Mounting Options

Top Mounting (M)

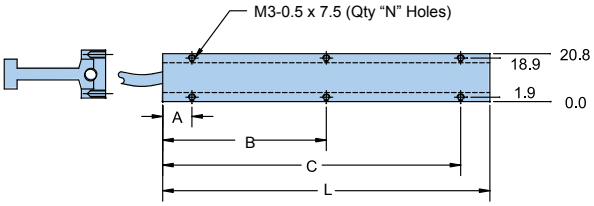

Coil Size/Mounting Code	Dimensions (mm)				
	L	N	A	B	C
110-1M	81.3	4	12.7	68.6	—
110-2M	142.2	6	0.50	71.1	129.5

Side Mounting (N)

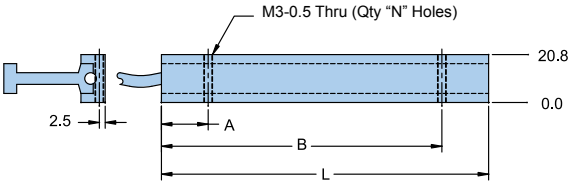

Coil Size/Mounting Code	Dimensions (mm)			
	L	N	A	B
110-1N	81.3	2	20.3	60.9
110-2N	142.2	2	20.3	121.9

How to order

Fill in an order code from each of the numbered fields to create a complete Motor Coil and Magnet Track order number.

Motor Coil

Order Example:

①	②	③	④	⑤	⑥	⑦
110	- 2	B	- NC	- WD2	P	- 8

① **Series**
110

② **Coil Size**
1 One pole
2 Two poles

③ **Mounting**
A Imperial top mount
B Imperial side mount
M Metric top mount
N Metric side mount

④ **Cooling**
NC No cooling

⑤ **Wiring Options** (Refer to page 7)
WD0
WD1
WD2
WD3
WD4

⑥ **Winding**
S Series
P Parallel
T Triple (not available for 1-pole motor)

⑦ **Cable Length**
xx Specify in feet (8 ft standard)

Magnet Track

Order Example:

①	②
11024M1 -	N

① **Series**
11007M 7.20” modular sections (refer to Modular Track Combinations chart on page 9)
11009M 9.60” modular sections (refer to Modular Track Combinations length chart on page 9)
110xxM 4.8 to 36.0” single piece, 2.4” increments (refer to part number selection chart on page 9)
110xxM1 4.8“ to 36.0” single piece, 2.4” increments (refer to part number selection chart on page 9)
110xxS 8.4” to 36.0” single piece, 1.2” increments (refer to part number selection chart on page 9)

② **Magnet Coating**
N Nickel coating (standard)
B Black epoxy

I-Force Ironless 210 Series

Performance

Model	Units	210-1	210-2	210-3	210-4
Peak Force 1)	N (lb)	137.0 (30.8)	255.8 (57.5)	375.0 (84.3)	494.2 (111.1)
Continuous Force 2)	N (lb)	30.7 (6.9)	57.4 (12.9)	84.1 (18.9)	110.3 (24.8)
Peak Power	W	905	1583	2261	2940
Continuous Power	W	45	79	113	147

1) Peak force and current based on 5% duty cycle and one second duration.
2) Continuous force and current based on coil winding temperature maintained at 100 ºC.

Electrical

Model	Units	210-1			210-2			210-3			210-4		
Winding	Series/Parallel/Triple	**S**	**P**	**T**	**S**	**P**	**T**	**S**	**P**	**T**	**S**	**P**	**T**
Peak Current	A pk sine	12.6	25.2	37.8	11.8	23.6	35.4	11.5	23.0	34.5	11.3	22.6	33.9
	RMS	8.9	17.8	26.7	8.3	16.7	25.0	8.1	16.3	24.4	8.0	16.0	23.9
Continuous Current	A pk sine	2.8	5.6	8.4	2.6	5.2	7.8	2.6	5.2	7.8	2.5	5.0	7.5
	RMS	1.9	3.9	5.9	1.8	3.7	5.5	1.8	3.7	5.5	1.8	3.5	5.3
Force Constant 1)	N/A peak	10.9	5.4	3.6	21.8	10.9	7.3	32.7	16.4	10.9	43.6	21.8	14.5
	lb/A peak	2.5	1.2	0.8	4.9	2.5	1.6	7.4	3.7	2.5	9.8	4.9	3.3
Back EMF 2)	V/m/s	12.6	6.3	4.2	25.2	12.6	8.4	37.8	18.9	12.6	50.4	25.2	16.8
	V/in/s	0.32	0.16	0.11	0.64	0.32	0.21	0.96	0.48	0.32	1.28	0.64	0.43
Resistance @ 25°C (phase-to-phase) 3)	ohms	5.9	1.5	0.7	11.8	3.0	1.3	17.7	4.4	2.0	23.6	5.9	2.6
Inductance (phase-to-phase) 4)	mH	2.4	0.6	0.3	4.8	1.2	0.5	7.2	1.8	0.8	9.6	2.4	1.1
Electrical Time Constant 5)	ms	0.4	0.4	0.4	0.4	0.4	0.4	0.4	0.4	0.4	0.4	0.4	0.4
Motor Constant 6)	N/W	4.54	4.54	4.54	6.45	6.45	6.45	7.87	7.87	7.87	9.12	9.12	9.12
	lb/W	1.02	1.02	1.02	1.45	1.45	1.45	1.77	1.77	1.77	2.05	2.05	2.05
Terminal Voltage (max.) 7)	VDC	330	330	330	330	330	330	330	330	330	330	330	330

1) Force constant is peak of resistive force produced by 1.0 amp thru one motor lead and 0.5 amps thru other two leads.
Also, Back EMF (V/in/sec) * 7.665 = Force constant (lb/amp).
2) Back EMF measured between any two motor leads while moving at constant velocity. Value is amplitude or 0-Peak of sine wave produced.
3) Resistance measured between any two motor leads with motor connected in Delta winding at 25 ºC. For temperature at 100 ºC, multiply resistance by 1.295 (75 ºC rise * 0.393%/ºC).
4) Inductance measured using 1 Kz with the motor in the magnetic field.
5) Electrical time constant is time it takes for motor value to reach 63% of its final current after a step change in voltage.
6) Motor constant is a measure of efficiency. Calculated by dividing the force constant by the square root of the motor resistance at maximum operating temperature.
7) Consult factory for use with non-Parker amplifiers.

Thermal*

Model	Units	210-1	210-2	210-3	210-4
Thermal Resistance Wind-Amb	°C/W	1.67	0.94	0.66	0.51
Thermal Time Constant (min.) 1)		4.3	4.3	4.3	4.3
Maximum Winding Temperature 2)	°C	100	100	100	100

* Use Parker's MotionSizer software for the most accurate estimate of coil temperature for a particular motion profile.
1) Thermal time constant is time it takes for motor temperature to reach 63% of its final value after a step change in power.
2) Thermal resistance is the number of degrees (Celsius) of temperature rise in the winding per watt of power dissipated determined experimentally.

Mechanical

Model	Units	210-1	210-2	210-3	210-4
Coil Weight	kg (lb)	0.16 (0.35)	0.27 (0.60)	0.39 (0.86)	0.51 (1.12)
Coil Length	mm (in)	81.3 (3.20)	142.2 (5.60)	203.2 (8.00)	264.2 (10.4)
Attractive Force	N (lbf)	0	0	0	0
Electrical Cycle Length [1]	mm (in)	60.96 (2.40)	60.96 (2.40)	60.96 (2.40)	60.96 (2.40)

1) Electrical cycle length is distance coil must travel to complete 360º electrical cycle.

Wiring Options

WD1

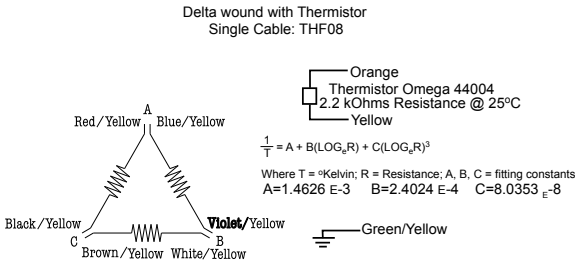

WD4

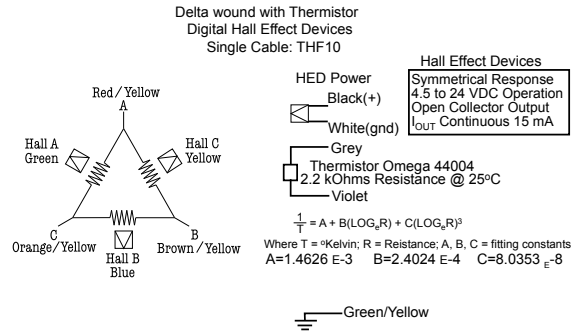

WD2

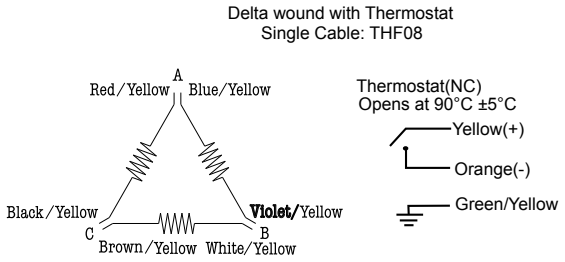

WD7

Preferred configuration with Parker Drives

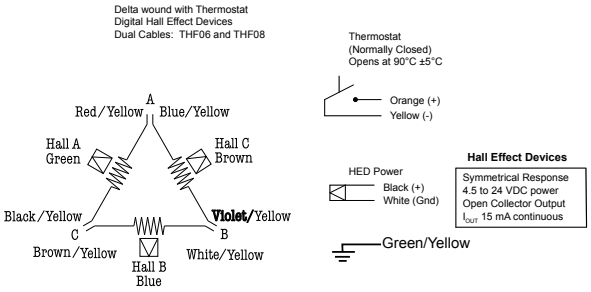

WD3

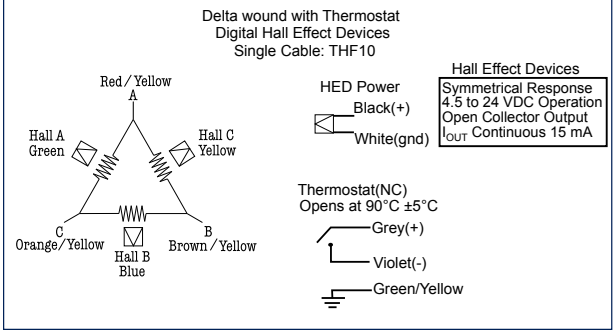

I-Force Ironless 210 Series

Magnet Track Specifications

210xxM Modular – mm (in)

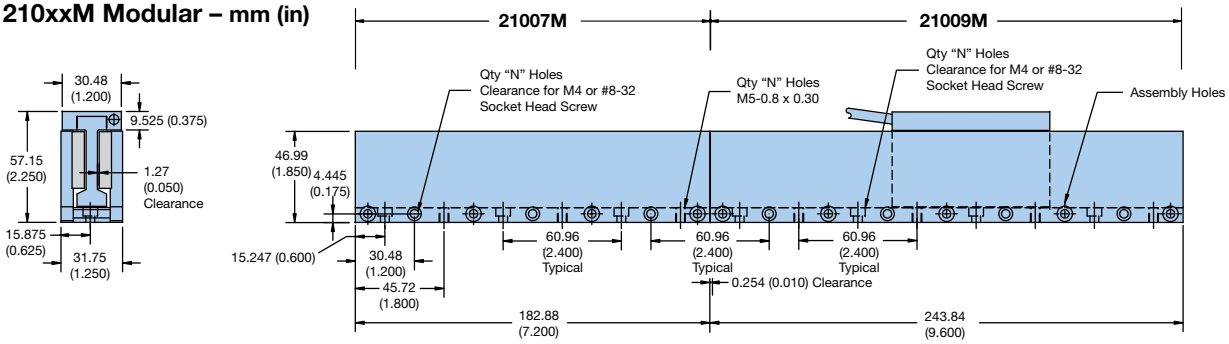

210xxM1 Modular – mm (in)

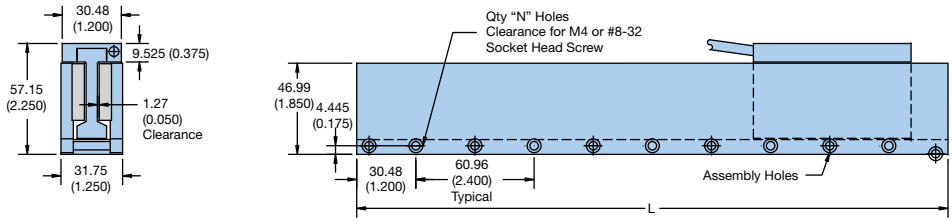

210xxS Single Piece – mm (in)

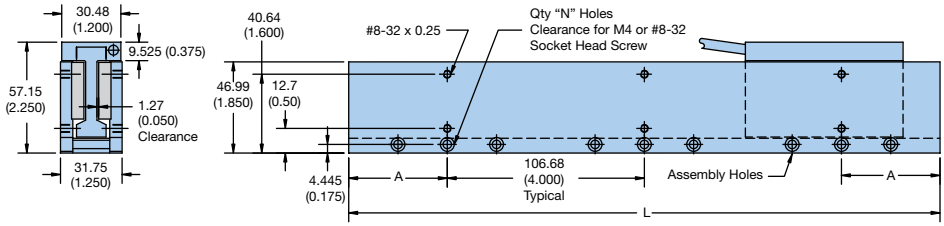

	210xxM Modular	210xxM1 Modular	210xxS Single Piece
Incremental Length – mm (in)	60.96 (2.4)	60.96 (2.4)	30.48 (1.2)
Minimum Length – mm (in)	121.92 (4.8)	121.92 (4.8)	213.4 (8.4)
Maximum Length – mm (in) (for single piece)	1219.2 (48)	1219.2 (48)	1219.2 (48)
Weight – kg/m (lbs/ft)	8.22 (5.50)	8.22 (5.50)	8.22 (5.50)

210xxM and 210xxM1 Modular

Part Number	L mm	L in	N
21004M/M1	121.92	4.8	2
21007M/M1	182.88	7.2	3
21009M/M1	243.84	9.6	4
21012M/M1	304.80	12.0	5
21014M/M1	365.76	14.4	6
21016M/M1	426.72	16.8	7
21019M/M1	487.68	19.2	8
21021M/M1	548.64	21.6	9
21024M/M1	609.60	24.0	10
21026M/M1	670.56	26.4	11
21028M/M1	731.52	28.8	12
21031M/M1	792.48	31.2	13
21033M/M1	853.44	33.6	14
21036M/M1	914.40	36.0	15
21038M/M1	975.36	38.4	16
21040M/M1	1036.32	40.8	17
21043M/M1	1097.28	43.2	18
21045M/M1	1158.24	45.6	19
21048M/M1	1219.20	48.0	20

Modular Track Combinations With 21007M/M1 and 21009M/M1 Sections

Length (L)*		Quantity	
mm	in	21007M/M1	21009M/M1
182.9	7.2	1	0
243.8	9.6	0	1
365.8	14.4	2	0
426.7	16.8	1	1
487.7	19.2	0	2
548.6	21.6	3	0
609.6	24.0	2	1
670.6	26.4	1	2
731.5	28.8	0	3
792.5	31.2	3	1
853.4	33.6	2	2
914.4	36.0	1	3
975.4	38.4	0	4
1036.3	40.8	3	2
1097.3	43.2	2	3
1158.2	45.6	1	4
1219.2	48.0	0	5

*Length is unlimited by combining modular track sections.

210xxS Single Piece

Part Number	L mm	L in	A mm	A in	N
21008S	213.36	8.4	5.08	0.20	3
21009S	243.84	9.6	20.32	0.80	3
21010S	274.32	10.8	35.56	1.40	3
21012S	304.80	12.0	50.80	2.00	3
21013S	335.28	13.2	66.04	2.60	3
21014S	365.76	14.4	81.28	3.20	3
21015S	396.24	15.6	96.52	3.80	3
21016S	426.72	16.8	10.16	0.40	5
21018S	457.20	18.0	25.40	1.00	5
21019S	487.68	19.2	40.64	1.60	5
21020S	518.16	20.4	55.88	2.20	5
21021S	548.64	21.6	71.12	2.80	5
21022S	579.12	22.8	86.36	3.40	5
21024S	609.60	24.0	101.60	4.00	5
21025S	640.08	25.2	15.24	0.60	7
21026S	670.56	26.4	30.48	1.20	7
21027S	701.04	27.6	45.72	1.80	7
21028S	731.52	28.8	60.96	2.40	7
21030S	762.00	30.0	76.20	3.00	7
21031S	792.48	31.2	91.44	3.60	7
21032S	822.96	32.4	5.08	0.20	9
21033S	853.44	33.6	20.32	0.80	9
21034S	883.92	34.8	35.56	1.40	9
21036S	914.40	36.0	50.80	2.00	9
21037S	944.88	37.2	66.04	2.60	9
21038S	975.36	38.4	81.28	3.20	9
21039S	1005.84	39.6	96.52	3.80	9
21040S	1036.32	40.8	10.16	0.40	11
21042S	1066.80	42.0	25.40	1.00	11
21043S	1097.28	43.2	40.64	1.60	11
21044S	1127.76	44.4	55.88	2.20	11
21045S	1158.24	45.6	71.12	2.80	11
21046S	1188.72	46.8	86.36	3.40	11
21048S	1219.20	48.0	101.60	4.00	11

I-Force Ironless 210 Series

Coil Specifications

Imperial Mounting Options

Top Mounting (A)

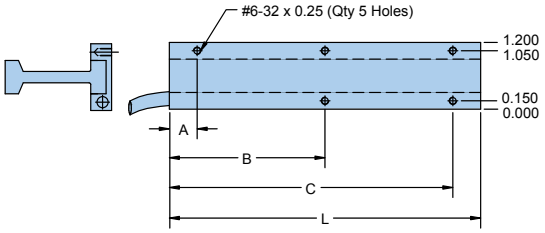

Coil Size/Mounting Code	Dimensions (in)			
	L	A	B	C
210-1A	3.20	0.50	1.60	2.70
210-2A	5.60	0.50	2.80	5.10
210-3A	8.00	0.50	4.00	7.50
210-4A	10.40	0.50	5.20	9.90

Side Mounting (B)

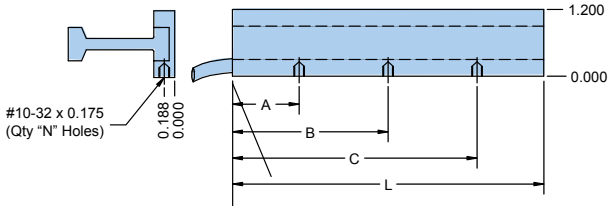

Coil Size/Mounting Code	Dimensions (in)				
	L	N	A	B	C
210-1B	3.20	2	1.950	2.950	—
210-2B	5.60	2	1.625	3.975	—
210-3B	8.00	3	2.438	4.000	5.562
210-4B	10.40	3	2.600	5.200	7.800

Metric Mounting Options

Top Mounting (M)

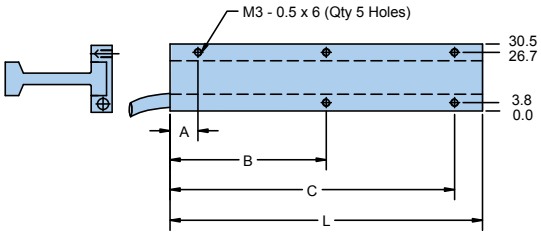

Coil Size/Mounting Code	Dimensions (mm)			
	L	A	B	C
210-1M	81.3	12.7	40.6	68.6
210-2M	142.2	12.7	71.1	129.5
210-3M	203.2	12.7	101.6	190.5
210-4M	264.2	12.7	132.1	251.5

Side Mounting (N)

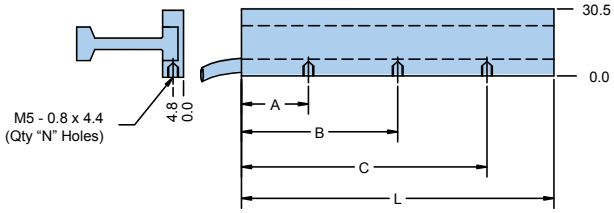

Coil Size/Mounting Code	Dimensions (mm)				
	L	N	A	B	C
210-1N	81.3	2	49.5	74.9	—
210-2N	142.2	2	41.3	101.0	—
210-3N	203.2	3	61.9	101.6	141.3
210-4N	264.2	3	66.0	132.1	198.1

How to order

Fill in an order code from each of the numbered fields to create a complete Motor Coil and Magnet Track order number.

Motor Coil

Order Example:

①		②		③		④		⑤		⑥		⑦
210	-	2		B	-	NC	-	WD2		P	-	8

① **Series**
210

② **Coil Size**

1	One pole
2	Two poles
3	Three poles
4	Four poles

③ **Mounting**

A	Imperial top mount
B	Imperial side mount
M	Metric top mount
N	Metric side mount

④ **Cooling**

NC	No cooling
AC	Air cooling

⑤ **Wiring Options** (Refer to page 13)
WD1
WD2
WD3
WD4
WD7

⑥ **Winding**

S	Series
P	Parallel
T	Triple (not available for 1-pole motor)

⑦ **Cable Length**

xx	Specify in feet (8 ft standard)

Magnet Track

Order Example:

①		②
21024M1	-	N

① **Series**

21007M	7.20” modular sections (refer to Modular Track Combinations chart on page 15)
21009M	9.60” modular sections (refer to Modular Track Combinations length chart on page 15)
210xxM	4.8 to 48.0” single piece, 2.4” increments (refer to part number selection chart on page 15)
210xxM1	4.8 to 48.0” single piece, 2.4” increments (refer to part number selection chart on page 15)
210xxS	8.4” to 48.0” single piece, 1.2” increments (refer to part number selection chart on page 15)

② **Magnet Coating**

N	Nickel coating (standard)
B	Black epoxy

I-Force Ironless 310 Series

Performance

Model	Units	310-1	310-2	310-3	310-4	310-5	310-6
Peak Force 1)	N (lb)	218.9 (49.2)	409.3 (92.0)	600.0 (135.1)	790.0 (177.2)	980.0 (220.3)	1170.0 (263.2)
Continuous Force 2)	N (lb)	49.0 (11.0)	91.6 (20.6)	133.9 (30.1)	176.2 (39.6)	219.3 (49.3)	262.0 (58.9)
Peak Power	W	1077	1885	2693	3500	4308	5116
Continuous Power	W	54	94	135	179	215	256

1) Peak force and current based on 5% duty cycle and one second duration.
2) Continuous force and current based on coil winding temperature maintained at 100 ºC.

Electrical

Model	Units	310-1		310-2			310-3			310-4			310-5			310-6		
Winding	Series/Parallel/Triple	S	P	S	P	T	S	P	T	S	P	T	S	P	T	S	P	T
Peak Current	A pk sine	16.1	32.2	15.0	30.0	45.0	14.7	29.4	44.1	14.5	29.0	43.5	14.4	28.8	43.2	14.3	28.6	42.9
	RMS	11.4	22.8	10.6	21.2	31.8	10.4	20.8	31.2	10.3	20.5	30.8	10.2	20.4	30.5	10.1	20.2	30.3
Continuous Current	A pk sine	3.6	7.2	3.4	6.8	10.2	3.3	6.6	9.9	3.2	6.4	9.6	3.2	6.4	9.6	3.2	6.4	9.6
	RMS	2.5	5.1	2.4	4.8	7.2	2.5	4.7	7.0	2.3	4.5	6.8	2.3	4.5	6.8	2.3	4.5	6.8
Force Constant 1)	N/A peak	13.7	6.8	27.3	13.6	9.1	40.9	20.5	13.6	54.7	27.4	18.2	68.1	34.0	22.7	81.8	40.9	27.3
	lb/A peak	3.1	1.5	6.1	3.1	2.0	9.2	4.6	3.1	12.3	6.2	4.1	15.3	7.7	5.1	18.4	9.2	6.1
Back EMF 2)	V/m/s	15.7	7.8	31.5	15.7	10.5	47.2	23.6	15.7	63.0	31.5	21.0	78.7	39.4	26.2	94.5	47.2	31.5
	V/in/s	0.40	0.20	0.80	0.40	0.27	1.20	0.60	0.40	1.60	0.80	0.53	2.00	1.00	0.67	2.40	1.20	0.80
Resistance @ 25°C (phase-to-phase) 3)	ohms	4.0	1.0	8.1	2	0.87	12.1	3	1.3	16.1	3.87	1.74	20.2	4.84	2.17	24.2	5.8	2.6
Inductance (phase-to-phase) 4)	mH	3.0	0.8	6.0	1.5	0.7	9.0	2.3	1.0	12.0	3.0	1.3	15.0	3.8	1.7	18.0	4.5	2.0
Electrical Time Constant 5)	ms	0.7	0.7	0.7	0.7	0.7	0.7	0.7	0.7	0.7	0.7	0.7	0.7	0.7	0.7	0.7	0.7	0.7
Motor Constant 6)	N/W	6.67	6.67	9.43	9.43	9.43	11.57	11.57	11.57	13.34	13.34	13.34	14.95	14.95	14.95	16.37	16.37	16.37
	lb/W	1.50	1.50	2.12	2.12	2.12	2.60	2.60	2.60	3.00	3.00	3.00	3.36	3.36	3.36	3.68	3.68	3.68
Terminal Voltage (max.) 7)	VDC	330	330	330	330	330	330	330	330	330	330	330	330	330	330	330	330	330

1) Force constant is peak of resistive force produced by 1.0 amp thru one motor lead and 0.5 amps thru other two leads.
Also, Back EMF (V/in/sec) * 7.665 = Force constant (lb/amp).
2) Back EMF measured between any two motor leads while moving at constant velocity. Value is amplitude or 0-Peak of sine wave produced.
3) Resistance measured between any two motor leads with motor connected in Delta winding at 25 ºC. For temperature at 100 ºC, multiply resistance by 1.295 (75 ºC rise * 0.393%/ºC).
4) Inductance measured using 1 Kz with the motor in the magnetic field.
5) Electrical time constant is time it takes for motor value to reach 63% of its final current after a step change in voltage.
6) Motor constant is a measure of efficiency. Calculated by dividing the force constant by the square root of the motor resistance at maximum operating temperature.
7) Consult factory for use with non-Parker amplifiers.

Thermal*

Model	Units	310-1	310-2	310-3	310-4	310-5	310-6
Thermal Resistance Wind-Amb	°C/W	1.39	0.79	0.56	0.43	0.35	0.29
Thermal Time Constant (min.) 1)		7.5	7.5	7.5	7.5	7.5	7.5
Maximum Winding Temperature 2)	°C	100	100	100	100	100	100

* Use Parker's MotionSizer software for the most accurate estimate of coil temperature for a particular motion profile.
1) Thermal time constant is time it takes for motor temperature to reach 63% of its final value after a step change in power.
2) Thermal resistance is the number of degrees (Celsius) of temperature rise in the winding per watt of power dissipated determined experimentally.

Mechanical

Model	Units	310-1	310-2	310-3	310-4	310-5	310-6
Coil Weight	kg (lb)	0.31 (0.69)	0.55 (1.22)	0.80 (1.75)	1.03 (2.27)	1.27 (2.80)	1.53 (3.36)
Coil Length	mm (in)	81.3 (3.20)	142.2 (5.60)	203.2 (8.00)	264.2 (10.4)	325.1 (12.8)	386.1 (15.2)
Attractive Force	N (lbf)	0	0	0	0	0	0
Electrical Cycle Length [1]	mm (in)	60.96 (2.40)	60.96 (2.40)	60.96 (2.40)	60.96 (2.40)	60.96 (2.40)	60.96 (2.40)

1) Electrical cycle length is distance coil must travel to complete 360º electrical cycle.

Wiring Options

WD1

Delta wound with Thermistor
Single Cable: THF08

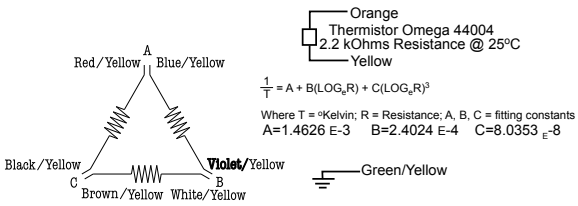

WD4

Delta wound with Thermistor
Digital Hall Effect Devices
Single Cable: THF10

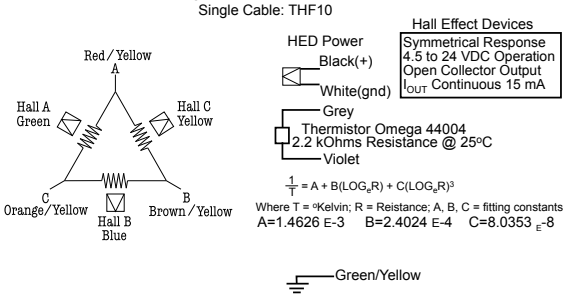

WD2

Delta wound with Thermostat
Single Cable: THF08

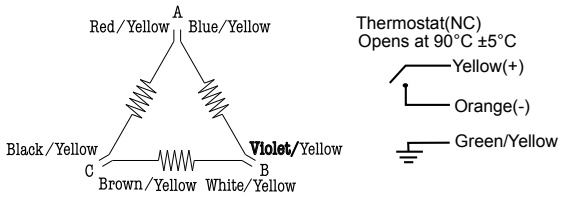

WD7

Preferred configuration with Parker Drives

Delta wound with Thermostat
Digital Hall Effect Devices
Dual Cables: THF06 and THF08

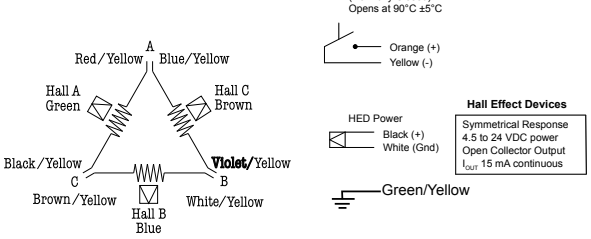

WD3

Delta wound with Thermostat
Digital Hall Effect Devices
Single Cable: THF10

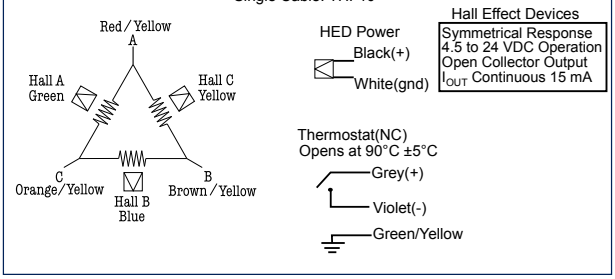

I-Force Ironless 310 Series

Magnet Track Specifications

310xxM Modular – mm (in)

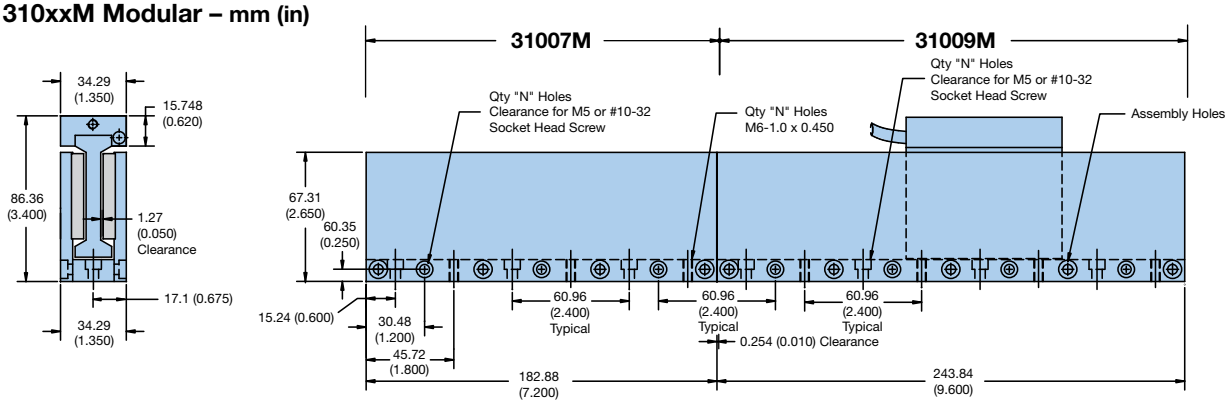

310xxM1 Modular – mm (in)

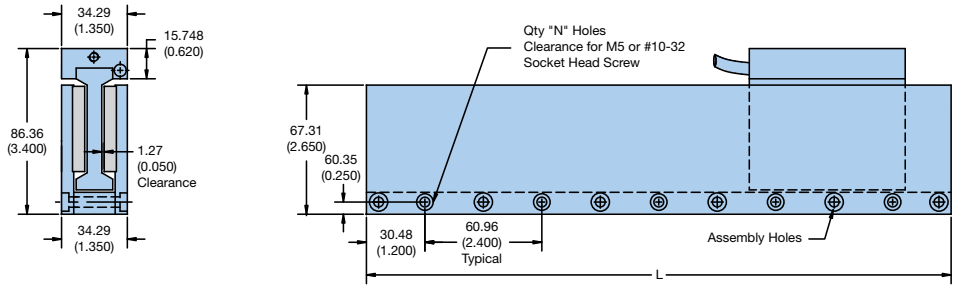

310xxS Single Piece – mm (in)

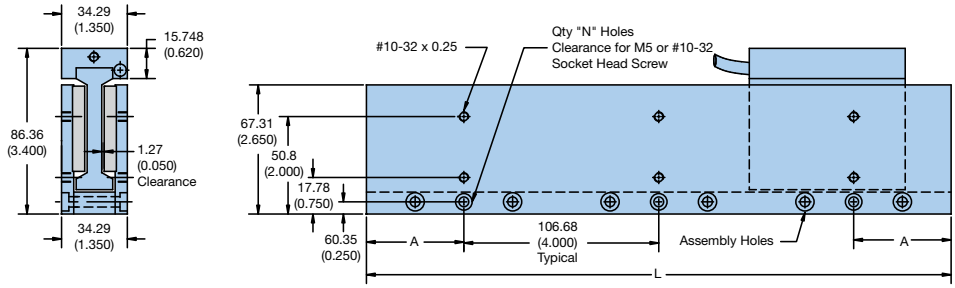

	310xxM Modular	310xxM1 Modular	310xxS Single Piece
Incremental Length – mm (in)	60.96 (2.4)	60.96 (2.4)	30.48 (1.2)
Minimum Length – mm (in)	121.92 (4.8)	121.92 (4.8)	213.4 (8.4)
Maximum Length – mm (in) (for single piece)	1584.96 (62.4)	1584.96 (62.4)	1615.4 (63.6)
Weight – kg/m (lbs/ft)	12.7 (8.50)	12.7 (8.50)	12.7 (8.50)

310xxM and 310xxM1 Modular

Part Number	L mm	L in	N
31004M/M1	121.92	4.8	2
31007M/M1	182.88	7.2	3
31009M/M1	243.84	9.6	4
31012M/M1	304.80	12.0	5
31014M/M1	365.76	14.4	6
31016M/M1	426.72	16.8	7
31019M/M1	487.68	19.2	8
31021M/M1	548.64	21.6	9
31024M/M1	609.60	24.0	10
31026M/M1	670.56	26.4	11
31028M/M1	731.52	28.8	12
31031M/M1	792.48	31.2	13
31033M/M1	853.44	33.6	14
31036M/M1	914.40	36.0	15
31038M/M1	975.36	38.4	16
31040M/M1	1036.32	40.8	17
31043M/M1	1097.28	43.2	18
31045M/M1	1158.24	45.6	19
31048M/M1	1219.20	48.0	20
31050M/M1	1280.16	50.4	21
31052M/M1	1341.12	52.8	22
31055M/M1	1402.08	55.2	23
31057M/M1	1463.04	57.6	24
31060M/M1	1524.00	60.0	25
31062M/M1	1584.96	62.4	26

Modular Track Combinations With 31007M/M1 and 31009M/M1 Sections

Length (L)* mm	Length (L)* in	Quantity 31007M/M1	Quantity 31009M/M1
182.9	7.2	1	0
243.8	9.6	0	1
365.8	14.4	2	0
426.7	16.8	1	1
487.7	19.2	0	2
548.6	21.6	3	0
609.6	24.0	2	1
670.6	26.4	1	2
731.5	28.8	0	3
792.5	31.2	3	1
853.4	33.6	2	2
914.4	36.0	1	3
975.4	38.4	0	4
1036.3	40.8	3	2
1097.3	43.2	2	3
1158.2	45.6	1	4
1219.2	48.0	0	5

*Length is unlimited by combining modular track sections.

310xxS Single Piece

Part Number	L mm	L in	A mm	A in	N
31008S	213.36	8.4	5.08	0.20	3
31009S	243.84	9.6	20.32	0.80	3
31010S	274.32	10.8	35.56	1.40	3
31012S	304.80	12.0	50.80	2.00	3
31013S	335.28	13.2	66.04	2.60	3
31014S	365.76	14.4	81.28	3.20	3
31015S	396.24	15.6	96.52	3.80	3
31016S	426.72	16.8	10.16	0.40	5
31018S	457.20	18.0	25.40	1.00	5
31019S	487.68	19.2	40.64	1.60	5
31020S	518.16	20.4	55.88	2.20	5
31021S	548.64	21.6	71.12	2.80	5
31022S	579.12	22.8	86.36	3.40	5
31024S	609.60	24.0	101.60	4.00	5
31025S	640.08	25.2	15.24	0.60	7
31026S	670.56	26.4	30.48	1.20	7
31027S	701.04	27.6	45.72	1.80	7
31028S	731.52	28.8	60.96	2.40	7
31030S	762.00	30.0	76.20	3.00	7
31031S	792.48	31.2	91.44	3.60	7
31032S	822.96	32.4	5.08	0.20	9
31033S	853.44	33.6	20.32	0.80	9
31034S	883.92	34.8	35.56	1.40	9
31036S	914.40	36.0	50.80	2.00	9
31037S	944.88	37.2	66.04	2.60	9
31038S	975.36	38.4	81.28	3.20	9
31039S	1005.84	39.6	96.52	3.80	9
31040S	1036.32	40.8	10.16	0.40	11
31042S	1066.80	42.0	25.40	1.00	11
31043S	1097.28	43.2	40.64	1.60	11
31044S	1127.76	44.4	55.88	2.20	11
31045S	1158.24	45.6	71.12	2.80	11
31046S	1188.72	46.8	86.36	3.40	11
31048S	1219.20	48.0	101.60	4.00	11
31049S	1249.68	49.2	15.24	0.60	13
31050S	1280.16	50.4	30.48	1.20	13
31051S	1310.64	51.6	45.72	1.80	13
31052S	1341.12	52.8	60.96	2.40	13
31054S	1371.60	54.0	76.20	3.00	13
31055S	1402.08	55.2	91.44	3.60	13
31056S	1432.56	56.4	5.08	0.20	15
31057S	1463.04	57.6	20.32	0.80	15
31058S	1493.52	58.8	35.56	1.40	15
31060S	1524.00	60.0	50.80	2.00	15
31061S	1554.48	61.2	66.04	2.60	15
31062S	1584.96	62.4	81.28	3.20	15
31063S	1615.44	63.6	96.52	3.80	15

I-Force Ironless 310 Series

Coil Specifications

Imperial Mounting Options

Top Mounting (A)

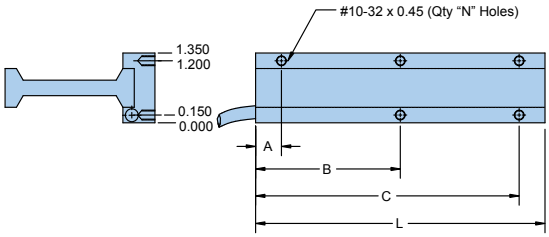

Side Mounting (B)

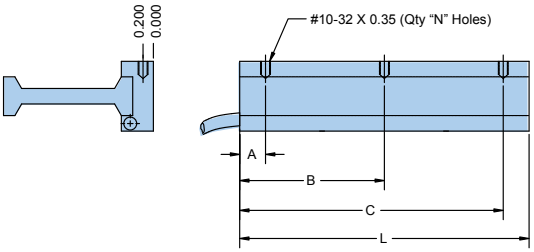

Coil Size/Mounting Code	Dimensions (in)				
	L	N	A	B	C
310-1A	3.20	4	0.50	1.60	2.70
310-2A	5.60	5	0.50	2.80	5.10
310-3A	8.00	5	0.50	4.00	7.50
310-4A	10.40	5	0.50	5.20	9.90
310-5A	12.80	5	0.50	6.40	12.30
310-6A	15.20	5	1.70	7.60	13.50

Coil Size/Mounting Code	Dimensions (in)				
	L	N	A	B	C
310-1B	3.20	2	1.950	2.950	—
310-2B	5.60	2	1.625	3.975	—
310-3B	8.00	3	2.438	4.000	5.562
310-4B	10.40	3	2.600	5.200	7.800
310-5B	12.80	3	0.50	6.40	12.30
310-6B	15.20	3	1.70	7.60	13.50

Metric Mounting Options

Top Mounting (M)

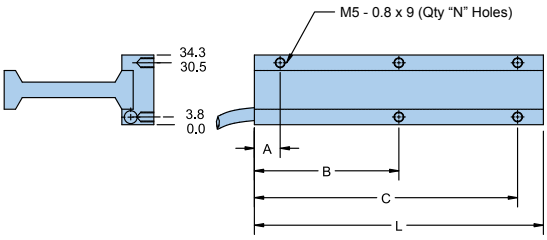

Side Mounting (N)

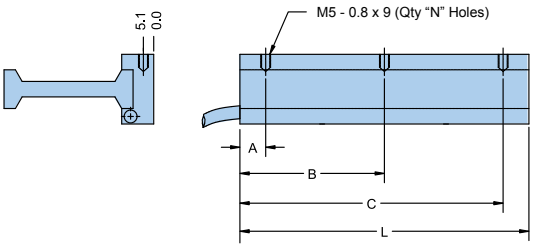

Coil Size/Mounting Code	Dimensions (mm)				
	L	N	A	B	C
310-1M	81.3	4	12.7	40.6	68.6
310-2M	142.2	5	12.7	71.1	129.5
310-3M	203.2	5	12.7	101.6	190.5
310-4M	264.2	5	12.7	132.1	251.5
310-5M	325.1	5	12.7	162.6	312.4
310-6M	386.1	5	43.2	193.0	342.9

Coil Size/Mounting Code	Dimensions (mm)				
	L	N	A	B	C
310-1N	81.3	2	49.5	74.9	—
310-2N	142.2	2	41.3	101.0	—
310-3N	203.2	3	61.9	101.6	141.3
310-4N	264.2	3	66.0	132.1	198.1
310-5N	325.1	3	12.7	162.6	312.4
310-6N	386.1	3	43.2	193.0	342.9

How to order

Fill in an order code from each of the numbered fields to create a complete Motor Coil and Magnet Track order number.

Motor Coil

Order Example:

①	②	③	④	⑤	⑥	⑦
310 -	2	B -	NC -	WD2	P -	8

① **Series**
310

② **Coil Size**

1	One pole
2	Two poles
3	Three poles
4	Four poles
5	Five poles
6	Six poles

③ **Mounting**

A	Imperial top mount
B	Imperial side mount
M	Metric top mount
N	Metric side mount

④ **Cooling**

NC	No cooling
AC	Air cooling
LC	Liquid cooling

⑤ **Wiring Options** (Refer to page 19)
WD1
WD2
WD3
WD4
WD7

⑥ **Winding**

S	Series
P	Parallel
T	Triple (not available for 1-pole motor)

⑦ **Cable Length**

xx	Specify in feet (8 ft standard)

Magnet Track

Order Example:

①	②
31024M1 -	N

① **Series**

31007M	7.20” modular sections (refer to Modular Track Combinations chart on page 21)
31009M	9.60” modular sections (refer to Modular Track Combinations length chart on page 21)
310xxM	4.8 to 62.4” single piece, 2.4” increments (refer to part number selection chart on page 21)
310xxM1	4.8 to 62.4” single piece, 2.4” increments (refer to part number selection chart on page 21)
310xxS	8.4” to 63.6” single piece, 1.2” increments (refer to part number selection chart on page 21)

② **Magnet Coating**

N	Nickel coating (standard)
B	Black epoxy

I-Force Ironless 410 Series

Performance

Model	Units	410-2	410-3	410-4	410-6	410-8
Peak Force [1]	N (lb)	1041.4 (234.1)	1523.6 (342.5)	2006.3 (451.0)	2967.2 (667.0)	3928.1 (883.0)
Continuous Force [2]	N (lb)	233.1 (52.4)	340.8 (76.6)	448.9 (100.9)	663.7 (149.2)	878.6 (197.5)
Peak Power	W	2835	4050	5265	7695	10125
Continuous Power	W	142	203	263	385	506

1) Peak force and current based on 5% duty cycle and one second duration.
2) Continuous force and current based on coil winding temperature maintained at 100 ºC.

Electrical

Model	Units	410-2			410-3			410-4			410-6			410-8		
Winding	Series/Parallel/Triple	S	P	T	S	P	T	S	P	T	S	P	T	S	P	T
Peak Current	A pk sine	19.1	38.2	57.3	18.6	37.2	55.8	18.4	36.8	55.2	18.1	36.2	54.3	18.0	36.0	54.0
	RMS	13.5	27.0	40.5	13.2	23.6	39.5	13.0	26.0	39.0	12.8	25.6	38.4	12.7	25.5	38.2
Continuous Current	A pk sine	4.3	8.6	12.9	4.2	8.4	12.6	4.1	8.2	12.3	4.1	8.2	12.3	4.0	8.0	12.0
	RMS	3.0	6.1	9.1	3.0	5.9	8.9	2.9	5.8	8.7	2.9	5.8	8.7	2.8	5.7	8.5
Force Constant [1]	N/A peak	54.5	27.3	18.2	81.8	40.9	27.3	109.0	54.5	36.3	163.7	81.8	54.6	218.4	109.2	72.8
	lb/A peak	12.3	6.1	4.1	18.4	9.2	6.1	24.5	12.3	8.2	36.8	18.4	12.3	49.1	24.6	16.4
Back EMF [2]	V/m/s	63.0	31.5	21.0	94.5	47.2	31.5	126.0	63.0	42.0	189.0	94.5	63.0	252.0	126.0	84.0
	V/in/s	1.60	0.80	0.53	2.40	1.20	0.80	3.20	1.60	1.07	4.80	2.40	1.60	6.40	3.20	2.13
Resistance @ 25°C (phase-to-phase) [3]	ohms	8.0	2.0	0.9	12.0	3.0	1.3	16.0	4.0	1.8	24.0	6.0	2.7	32.0	8.0	3.6
Inductance (phase-to-phase) [4]	mH	10.0	2.5	1.1	15.0	3.8	1.7	20.0	5.0	2.2	30.0	7.5	3.3	40.0	10.0	4.4
Electrical Time Constant [5]	ms	1.3	1.3	1.3	1.3	1.3	1.3	1.3	1.3	1.3	1.3	1.3	1.3	1.3	1.3	1.3
Motor Constant [6]	N/W	19.57	19.57	19.57	23.98	23.98	23.98	27.67	27.67	27.67	33.90	33.90	33.90	39.14	39.14	39.14
	lb/W	4.40	4.40	4.40	5.39	5.39	5.39	6.22	6.22	6.22	7.62	7.62	7.62	8.80	8.80	8.80
Terminal Voltage (max.) [7]	VDC	330	330	330	330	330	330	330	330	330	330	330	330	330	330	330

1) Force constant is peak of resistive force produced by 1.0 amp thru one motor lead and 0.5 amps thru other two leads.
Also, Back EMF (V/in/sec) * 7.665 = Force constant (lb/amp).
2) Back EMF measured between any two motor leads while moving at constant velocity. Value is amplitude or 0-Peak of sine wave produced.
3) Resistance measured between any two motor leads with motor connected in Delta winding at 25 ºC. For temperature at 100 ºC, multiply resistance by 1.295 (75 ºC rise * 0.393%/ºC).
4) Inductance measured using 1 Kz with the motor in the magnetic field.
5) Electrical time constant is time it takes for motor value to reach 63% of its final current after a step change in voltage.
6) Motor constant is a measure of efficiency. Calculated by dividing the force constant by the square root of the motor resistance at maximum operating temperature.
7) Consult factory for use with non-Parker amplifiers.

Thermal*

Model	Units	410-2	410-3	410-4	410-6	410-8
Thermal Resistance Wind-Amb	°C/W	0.53	0.37	0.26	0.19	0.15
Thermal Time Constant (min.) [1]		15.1	15.1	15.1	15.1	15.1
Maximum Winding Temperature [2]	°C	100	100	100	100	100

* Use Parker's MotionSizer software for the most accurate estimate of coil temperature for a particular motion profile.
1) Thermal time constant is time it takes for motor temperature to reach 63% of its final value after a step change in power.
2) Thermal resistance is the number of degrees (Celsius) of temperature rise in the winding per watt of power dissipated determined experimentally.

Mechanical

Model	Units	410-2	410-3	410-4	410-6	410-8
Coil Weight	kg (lb)	1.59 (3.5)	2.27 (5.0)	2.95 (6.5)	4.32 (9.5)	5.68 (12.5)
Coil Length	mm (in)	199.1 (7.84)	284.5 (11.20)	369.8 (14.56)	540.5 (21.28)	711.2 (28.00)
Attractive Force	N (lbf)	0	0	0	0	0
Electrical Cycle Length [1]	mm (in)	85.34 (3.36)	85.34 (3.36)	85.34 (3.36)	85.34 (3.36)	85.34 (3.36)

1) Electrical cycle length is distance coil must travel to complete 360º electrical cycle.

Wiring Options

WD1

Delta wound with Thermistor
Single Cable: THF05

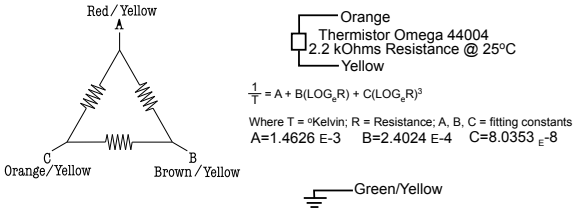

$\frac{1}{T} = A + B(LOG_eR) + C(LOG_eR)^3$

Where T = ºKelvin; R = Resistance; A, B, C = fitting constants
A=1.4626 E-3 B=2.4024 E-4 C=8.0353 $_E$-8

WD3 Preferred configuration with Parker Drives

Delta wound with Thermostat
Digital Hall Effect Devices
Dual Cable: THF05 and THF06

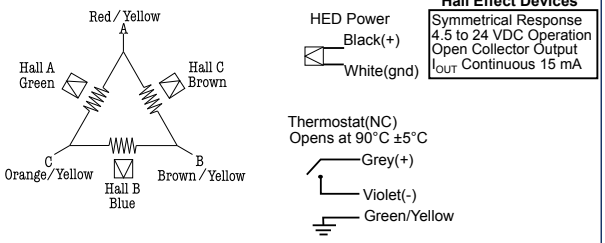

WD2

Delta wound with Thermostat
Single Cable: THF05

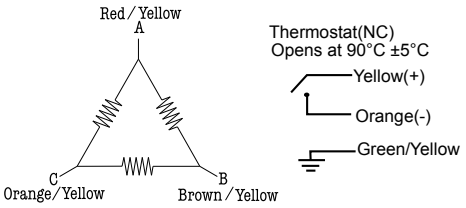

WD4

Delta wound with Thermistor
Digital Hall Effect Devices
Dual Cable: THF05 and THF06

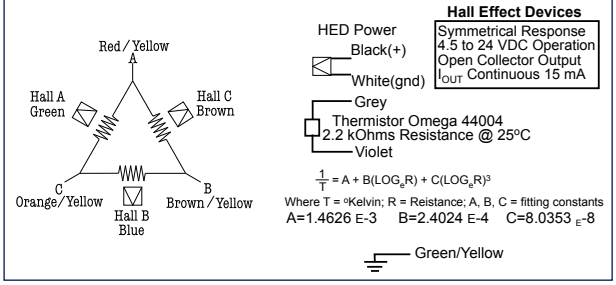

$\frac{1}{T} = A + B(LOG_eR) + C(LOG_eR)^3$

Where T = ºKelvin; R = Reistance; A, B, C = fitting constants
A=1.4626 E-3 B=2.4024 E-4 C=8.0353 $_E$-8

I-Force Ironless 410 Series

Magnet Track Specifications

410xxM Modular – mm (in)

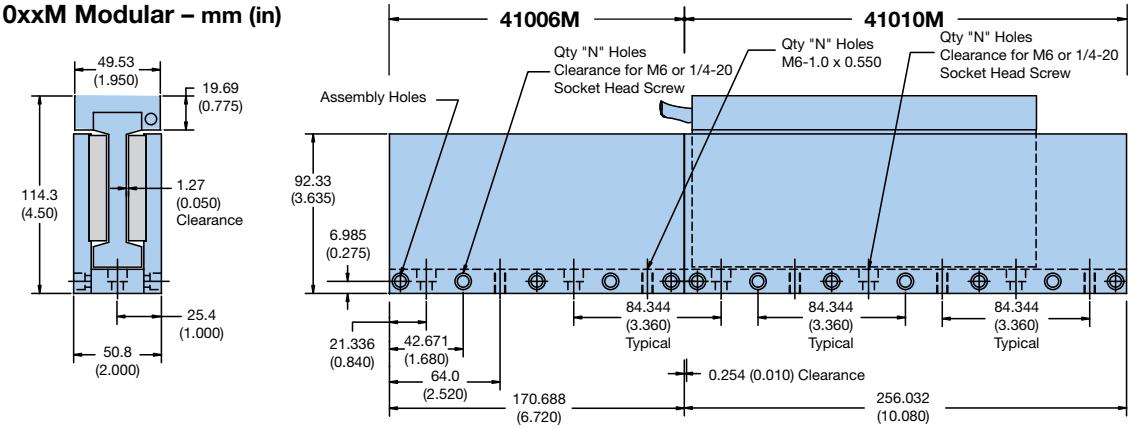

410xxM1 Modular – mm (in)

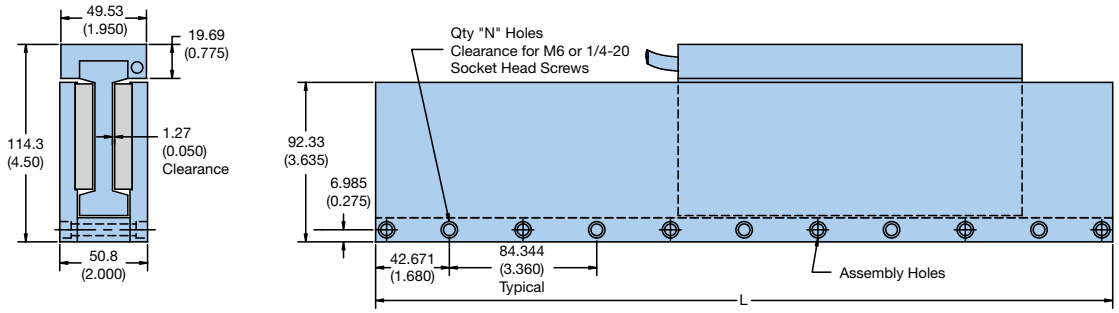

410xxS Single Piece – mm (in)

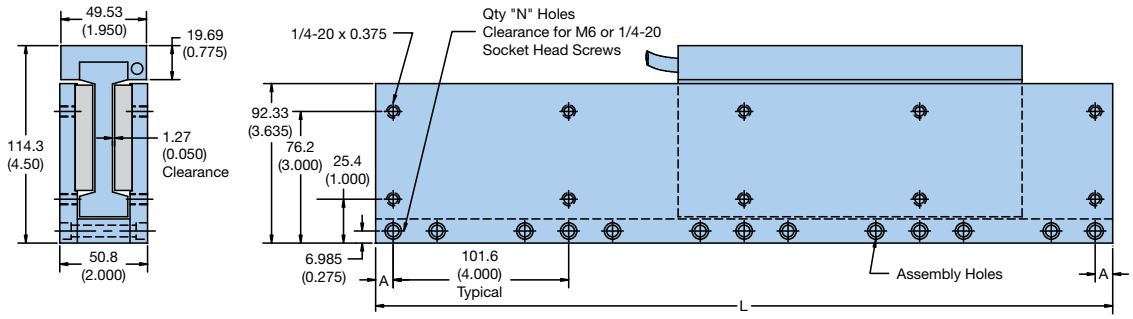

	410xxM Modular	410xxM1 Modular	410xxS Single Piece
Incremental Length – mm (in)	3.36 (85.3)	3.36 (85.3)	1.68 (42.7)
Minimum Length – mm (in)	6.72 (170.7)	6.72 (170.7)	8.4 (213.4)
Maximum Length – mm (in) (for single piece)	63.89 (1621.5)	63.89 (1621.5)	62.16 (1578.9)
Weight – kg/m (lbs/ft)	29.9 (20.0)	29.9 (20.0)	29.9 (20.0)

410xxM and 410xxM1 Modular

Part Number	L mm	L in	N
41006M/M1	170.69	6.72	2
41010M/M1	256.03	10.08	3
41013M/M1	341.38	13.44	4
41016M/M1	426.72	16.80	5
41020M/M1	512.06	20.16	6
41023M/M1	597.41	23.52	7
41026M/M1	682.75	26.88	8
41030M/M1	768.10	30.24	9
41033M/M1	853.44	33.60	10
41036M/M1	938.78	36.96	11
41040M/M1	1024.13	40.32	12
41043M/M1	1109.47	43.68	13
41047M/M1	1194.82	47.04	14
41050M/M1	1280.16	50.40	15
41053M/M1	1365.50	53.76	16
41057M/M1	1450.85	57.12	17
41060M/M1	1536.19	60.48	18
41063M/M1	1621.54	63.84	19

Modular Track Combinations With 41006M/M1 and 41010M/M1

Length (L)* mm	Length (L)* in	Quantity 41006M/M1	Quantity 41010M/M1
170.69	6.72	1	0
256.03	10.08	0	1
341.38	13.44	2	0
426.72	16.80	1	1
512.06	20.16	0	2
597.41	23.52	2	1
682.75	26.88	1	2
768.10	30.24	0	3
853.44	33.60	2	2
938.78	36.96	1	3
1024.13	40.32	0	4
1109.47	43.68	2	3
1194.82	47.04	1	4
1280.16	50.40	0	5
1365.50	53.76	2	4
1450.85	57.12	1	5
1536.19	60.48	0	6
1621.54	63.84	2	5
1706.88	67.20	1	6
1792.22	70.56	0	7
1877.57	73.92	2	6
1962.91	77.28	1	7
2048.26	80.64	0	8
2133.60	84.00	2	7
2218.94	87.36	1	8
2304.29	90.72	0	9
2389.63	94.08	2	8

*Length is unlimited by combining modular track sections.

410xxS Single Piece

Part Number	L mm	L in	A mm	A in	N
41008S	213.4	8.40	5.08	0.200	3
41010S	256.0	10.08	26.42	1.040	3
41011S	298.7	11.76	47.75	1.880	3
41013S	341.4	13.44	69.09	2.720	3
41015S	384.0	15.12	90.42	3.560	3
41016S	426.7	16.80	10.16	0.400	5
41018S	469.4	18.48	31.50	1.240	5
41020S	512.1	20.16	52.83	2.080	5
41021S	554.7	21.84	74.17	2.920	5
41023S	597.4	23.52	95.50	3.760	5
41025S	640.1	25.20	15.24	0.600	7
41026S	682.8	26.88	36.58	1.440	7
41028S	725.4	28.56	57.91	2.280	7
41030S	768.1	30.24	79.25	3.120	7
41031S	810.8	31.92	100.58	3.960	7
41033S	853.4	33.60	20.32	0.800	9
41035S	896.1	35.28	41.66	1.640	9
41036S	938.8	36.96	62.99	2.480	9
41038S	981.5	38.64	84.33	3.320	9
41040S	1024.1	40.32	105.66	4.160	9
41042S	1066.8	42.00	25.40	1.000	11
41043S	1109.5	43.68	46.74	1.840	11
41045S	1152.1	45.36	68.07	2.680	11
41047S	1194.8	47.04	89.41	3.520	11
41048S	1237.5	48.72	9.14	0.360	13
41050S	1280.2	50.40	30.48	1.200	13
41052S	1322.8	52.08	51.82	2.040	13
41053S	1365.5	53.76	73.15	2.880	13
41055S	1408.2	55.44	94.49	3.720	13
41057S	1450.8	57.12	14.22	0.560	15
41058S	1493.5	58.80	35.56	1.400	15
41060S	1536.2	60.48	56.90	2.240	15
41062S	1578.9	62.16	78.23	3.080	15

I-Force Ironless 410 Series

Coil Specifications

Imperial Mounting Options

Top Mounting (A)

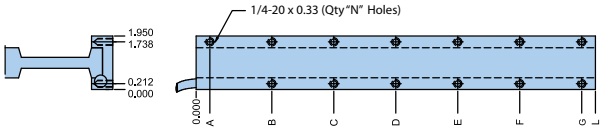

Side Mounting (B)

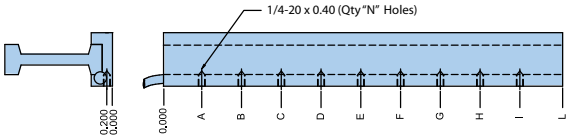

Coil Size/ Mounting Code	Dimensions (in)								
	L	N	A	B	C	D	E	F	G
410-2A	7.84	5	0.50	3.92	7.34	–	–	–	–
410-3A	11.20	8	0.50	1.60	5.60	9.60	10.70	–	–
410-4A	14.56	9	0.50	3.28	7.28	11.28	14.06	–	–
410-6A	21.28	13	0.50	2.64	6.64	10.64	14.64	18.64	20.78
410-8A	28.00	13	2.00	6.00	10.00	14.00	18.00	22.00	26.00

Coil Size/ Mounting Code	Dimensions (in)										
	L	N	A	B	C	D	E	F	G	H	I
410-2B	7.84	3	2.90	4.90	6.90	–	–	–	–	–	–
410-3B	11.20	3	4.10	7.10	10.10	–	–	–	–	–	–
410-4B	14.56	4	2.78	5.78	8.78	11.78	–	–	–	–	–
410-6B	21.28	6	3.14	6.14	9.14	12.14	15.14	18.14	–	–	–
410-8B	28.00	9	3.50	6.50	9.50	12.50	15.50	18.50	21.50	24.50	27.50

Metric Mounting Options

Top Mounting (M)

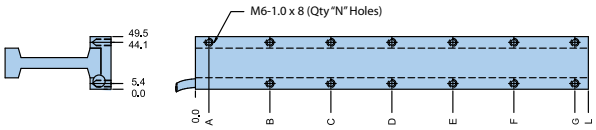

Side Mounting (N)

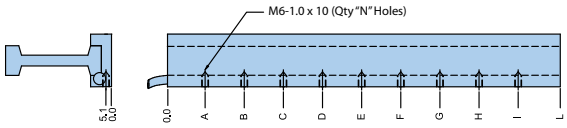

Coil Size/ Mounting Code	Dimensions (in)								
	L	N	A	B	C	D	E	F	G
410-2M	199.1	5	12.7	99.6	186.4	–	–	–	–
410-3M	284.5	8	12.7	40.6	142.2	243.8	271.8	–	–
410-4M	369.8	9	12.7	83.3	184.9	286.5	357.1	–	–
410-6M	540.5	13	12.7	67.1	168.7	270.3	371.9	473.4	527.8
410-8M	711.2	13	50.8	152.4	254.0	355.6	457.2	558.8	660.4

Coil Size/ Mounting Code	Dimensions (in)										
	L	N	A	B	C	D	E	F	G	H	I
410-2N	199.1	3	73.7	124.5	175.3	–	–	–	–	–	–
410-3N	284.5	3	104.1	180.3	256.5	–	–	–	–	–	–
410-4N	369.8	4	70.6	146.8	223.0	299.2	–	–	–	–	–
410-6N	540.5	6	79.7	156.0	232.2	308.4	384.6	460.8	–	–	–
410-8N	711.2	9	88.9	165.1	241.3	317.5	393.7	469.9	546.1	622.3	698.5

How to order

Fill in an order code from each of the numbered fields to create a complete Motor Coil and Magnet Track order number.

Motor Coil

Order Example:

①	②	③	④	⑤	⑥	⑦
410 -	2	B -	NC -	WD2	P -	8

① **Series**
410

② **Coil Size**

2	Two poles
3	Three poles
4	Four poles
6	Six poles
8	Eight poles

③ **Mounting**

A	Imperial top mount
B	Imperial side mount
M	Metric top mount
N	Metric side mount

④ **Cooling**

NC	No cooling
AC	Air cooling
LC	Liquid cooling

⑤ **Wiring Options** (Refer to page 25)
WD1
WD2
WD3
WD4

⑥ **Winding**

S	Series
P	Parallel
T	Triple

⑦ **Cable Length**

xx	Specify in feet (8 ft standard)

Magnet Track

Order Example:

①	②
41023M1 -	N

① **Series**

41006M	6.72” modular sections (refer to Modular Track Combinations chart on page 27)
41010M	10.08” modular sections (refer to Modular Track Combinations length chart on page 27)
410xxM	6.72 to 63.89” single piece, 3.36” increments (refer to part number selection chart on page 27)
410xxM1	6.72 to 63.89” single piece, 3.36” increments (refer to part number selection chart on page 27)
410xxS	8.4” to 62.16” single piece, 1.68” increments (refer to part number selection chart on page 27)

② **Magnet Coating**

N	Nickel coating (standard)
B	Black epoxy

I-Force Ironless ML50 Series

Performance

Model	Units	ML50-2	ML50-3	ML50-4	ML50-6	ML50-8	ML50-9
Peak Force [1]	N (lb)	847 (190.4)	1270 (285.6)	1694 (380.8)	2541 (571.1)	3387 (761.5)	3811 (856.7)
Continuous Force [2]	N (lb)	189 (42.6)	284 (63.9)	379 (85.1)	568 (127.7)	757 (170.3)	852 (191.6)
Peak Power	W	1560	2340	3120	4680	6240	7020
Continuous Power	W	78	117	156	234	312	351

1) Peak force and current based on 5% duty cycle and one second duration.
2) Continuous force and current based on coil winding temperature maintained at 100 ºC.

Electrical

Model	Units	ML50-2		ML50-3		ML50-4			ML50-6			ML50-8		ML50-9
Winding	Series/Parallel/Triple/ Double Triple	S	P	S	T	S	P	D	S	P	T	P	D	T
Peak Current	A pk sine	19.9	39.8	19.9	59.7	19.9	39.8	79.7	19.9	39.8	59.7	39.8	79.7	59.7
	RMS	14.1	28.1	14.1	42.2	14.1	28.1	53.4	14.1	28.1	42.2	28.1	53.4	42.2
Continuous Current	A pk sine	4.5	8.9	4.5	13.4	4.5	8.9	17.8	4.5	8.9	13.4	8.9	17.8	13.4
	RMS	3.2	6.3	3.2	9.5	3.2	6.3	12.6	3.2	6.3	9.5	6.3	12.6	9.5
Force Constant [1]	N/A peak	42.5	21.3	63.8	21.3	85.0	42.5	21.3	127.6	63.8	42.5	85.0	42.5	63.8
	lb/A peak	9.6	4.8	14.3	4.8	19.1	9.6	4.8	28.7	14.3	9.6	19.1	9.6	14.3
Back EMF [2]	V/m/s	49.1	24.5	73.6	24.5	98.2	49.1	24.5	147.3	73.6	49.1	98.2	49.1	73.6
	V/in/s	1.2	0.6	1.9	0.6	2.5	1.2	0.6	3.7	1.9	1.2	2.5	1.2	1.9
Resistance @ 25°C (phase-to-phase) [3]	ohms	4.1	1.0	6.1	0.7	8.1	2.0	0.5	12.2	3.0	1.4	4.1	1.0	2.0
Inductance (phase-to-phase) [4]	mH	3.3	0.8	5.0	0.6	6.6	1.7	0.4	9.9	2.5	1.1	3.3	0.8	1.7
Electrical Time Constant [5]	ms	0.8	0.8	0.8	0.8	0.8	0.8	0.8	0.8	0.8	0.8	0.8	0.8	0.8
Motor Constant [6]	N/W	21.4	21.4	26.3	26.3	30.3	30.3	30.3	37.1	37.1	37.1	42.9	42.9	45.5
	lb/W	4.82	4.8	5.90	5.9	6.82	6.8	6.8	8.35	8.3	8.3	9.6	9.6	10.2
Terminal Voltage (max.) [7]	VDC	330	330	330	330	330	330	330	330	330	330	330	330	330

1) Force constant is peak of resistive force produced by 1.0 amp thru one motor lead and 0.5 amps thru other two leads.
Also, Back EMF (V/in/sec) * 7.665 = Force constant (lb/amp).
2) Back EMF measured between any two motor leads while moving at constant velocity. Value is amplitude or 0-Peak of sine wave produced.
3) Resistance measured between any two motor leads with motor connected in Delta winding at 25 ºC. For temperature at 100 ºC, multiply resistance by 1.295 (75 ºC rise * 0.393%/ºC).
4) Inductance measured using 1 Kz with the motor in the magnetic field.
5) Electrical time constant is time it takes for motor value to reach 63% of its final current after a step change in voltage.
6) Motor constant is a measure of efficiency. Calculated by dividing the force constant by the square root of the motor resistance at maximum operating temperature.
7) Consult factory for use with non-Parker amplifiers.

Thermal*

Model	Units	ML50-2	ML50-3	ML50-4	ML50-6	ML50-8	ML50-9
Thermal Resistance Wind-Amb	°C/W	0.96	0.64	0.48	0.32	0.24	0.21
Thermal Time Constant (min.) [1]		9.2	9.2	9.2	9.2	9.2	9.2
Maximum Winding Temperature [2]	°C	100	100	100	100	100	100

* Use Parker's MotionSizer software for the most accurate estimate of coil temperature for a particular motion profile.
1) Thermal time constant is time it takes for motor temperature to reach 63% of its final value after a step change in power.
2) Thermal resistance is the number of degrees (Celsius) of temperature rise in the winding per watt of power dissipated determined experimentally.

Mechanical

Model	Units	ML50-2	ML50-3	ML50-4	ML50-6	ML50-8	ML50-9
Coil Weight	kg (lb)	0.7 (1.6)	1.1 (2.4)	1.5 (3.2)	2.2 (4.8)	2.9 (6.4)	3.3 (7.2)
Coil Length (excluding connector module)	mm (in)	120 (4.724)	180 (7.087)	240 (9.449)	360 (14.173)	480 (18.898)	540 (21.600)
Attractive Force	N (lbf)	0	0	0	0	0	0
Electrical Cycle Length 1)	mm (in)	60.0 (2.36)	60.0 (2.36)	60.0 (2.36)	60.0 (2.36)	60.0 (2.36)	60.0 (2.36)

1) Electrical cycle length is distance coil must travel to complete 360º electrical cycle.

ML50 Wiring with MLX-CM Module

Delta wound with Thermostat
Single Cable Exits MLX-CM Module: THF05

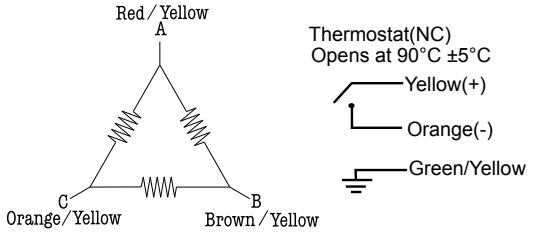

ML50 Wiring with MLX-HED Module

Delta wound with Thermostat
Digital Hall Effect Devices
Dual Cables Exit MLX-HED Module: THF05 and THF15

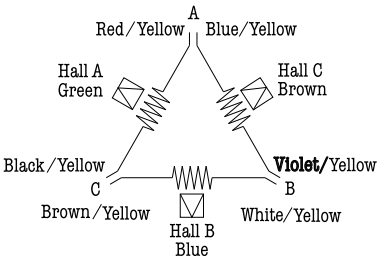

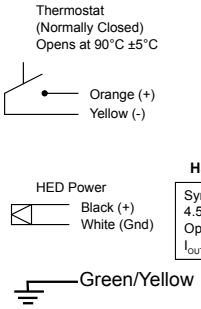

Hall Effect Devices

Symmetrical Response
4.5 to 24 VDC power
Open Collector Output
I_{OUT} 15 mA continuous

Module Funtion	THF15 Color Code
LIMIT_PWR	ORG
LIMIT_GND	VIO
HOME	BRN
+LIMIT	LGR/WHT
-LIMIT	LBL
HOME_SRC_PWR	RED
+LIMIT_SRC_PWR	GRY
-LIMIT_SRC_PWR	PNK
POLARITY_SELECT	TAN
HALL_PWR	BLK
HALL_GND	WHT
HALL_A	GRN
HALL_B	BLU
HALL_C	YEL

I-Force Ironless ML50 Series

Motor Coil Specifications

ML50-xE-NC-Mx Coil Assembly – mm

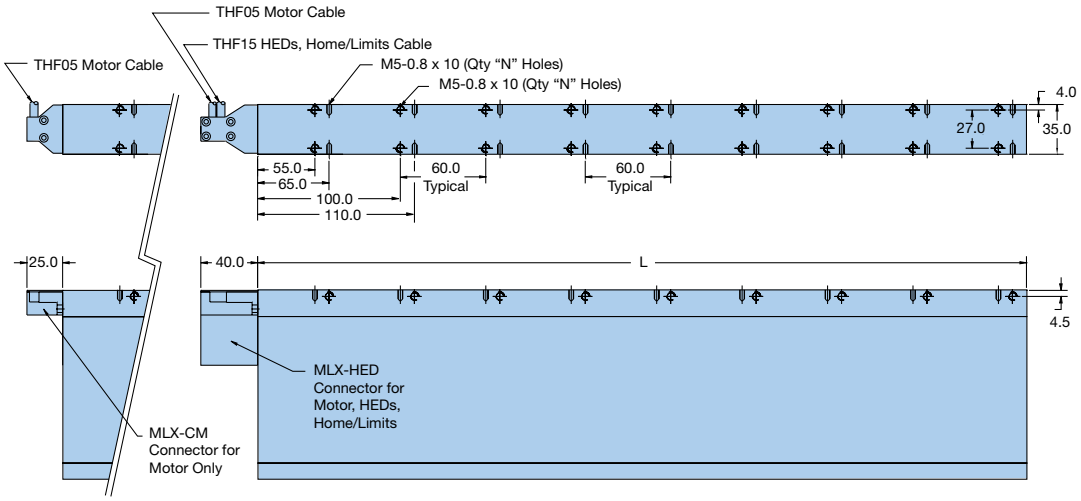

	L	N
ML50-2E	120	4
ML50-3E	180	6
ML50-4E	240	8
ML50-6E	360	12
ML50-8E	480	16
ML50-9E	540	18

Magnet Track Specifications

ML50 Modular Tracks – mm

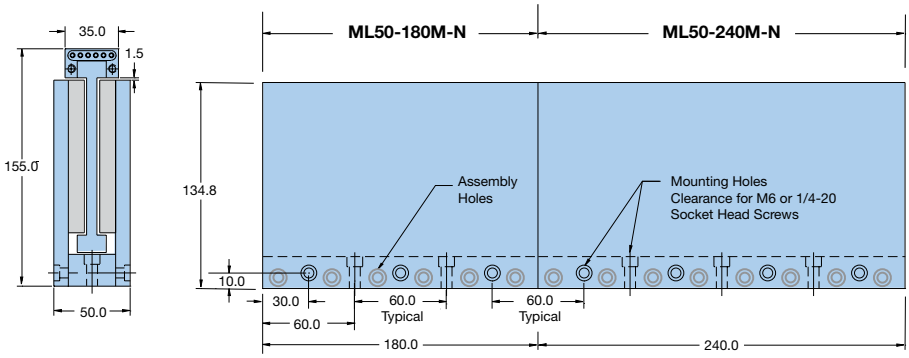

Incremental Length – mm	60
Minimum Length – mm	180
Maximum Length – mm (for single piece)	240
Weight – kg/m (lbs/ft)	37.9 (25.4)

How to order

Fill in an order code from each of the numbered fields to create a complete Motor Coil, Magnet Track and Connector Module order number.

Motor Coil

Order Example:

①	②	③	④	⑤	⑥
ML50 -	2	E -	NC -	M	S

① **Series**
ML50

② **Coil Size**

2	Two poles
3	Three poles
4	Four poles
6	Six poles
8	Eight poles
9	Nine poles

③ **Mounting**

E	Standard

④ **Cooling**

NC	No cooling

⑤ **Module Ready**

M	Receives connector module

⑥ **Winding**

S	Series
P	Parallel
T	Triple
D	Double Parallel

Magnet Track

Order Example:

①	②	③	④
ML50 -	240	M -	N

① **Series**
ML50

② **Track Length**

180	180 mm
240	240 mm

③ **Modular**

M	Standard

④ **Magnet Coating**

N	Nickel coating (standard)

Connector Module

Order Example:

①	②	③	④
MLX -	CM -	R -	1

① **Series**
MLX

② **Device Description**

CM	Motor connector
HED	Motor connector, Digital HEDs, limit sensor

③ **Module Type**

R	Standard

④ **Cable Length**

1	1 meter (standard)
x	specify length (in meters)

RIPPED Ironcore Linear Motors

Parker RIPPED ironcore linear motors, with their patented anti-cog technology, produce the large forces needed for many industrial applications – without the roughness associated with traditional ironcore linear motors. With forces ranging from 13 lbf (57.8 N) continuous up to 1671 lbf (7433 N) peak, the RIPPED family is well suited for a broad range of extremely demanding applications.

Parker offers modular magnet tracks for unrestricted travel length. The RIPPED motor connector modules allow quick and easy installation while reducing overall maintenance costs. Ultra-high-flex cables come standard.

Virtually cog-free operation combined with powerful ironcore technology make the RIPPED family of motors a superior choice for affordable high-force, ultra-smooth motion.

Features and Benefits

- **Ideal for high force applications**
- **Patented ultra-smooth anti-cog technology**
- **Connector modules allow quick and easy installation**
- **Internal thermal cutout switch protects coil**
- **Digital HEDs, home and +/- limit sensors incorporated into connector module**
- **Modular magnet tracks with flush mounted magnet separators**
- **Built-in cable strain relief**
- **Two lengths of modular magnet tracks allow unlimited length of travel**

Ironcore advantages

- **High force per size — uses laminations to concentrate the flux field**
- **Lower cost — open face design only uses one row of magnets**
- **Laminations and large surface area allows good heat dissipation**

Ironcore Disadvantages Compared to I-Force Ironless Linear Motors

- **Normal attractive force — 5 to 13 times greater than force generated**
- **Cogging — limits the smoothness of motion and creates velocity ripple. This is counteracted by Parker's patented anti-cog technology**

RIPPED Ironcore Design Features

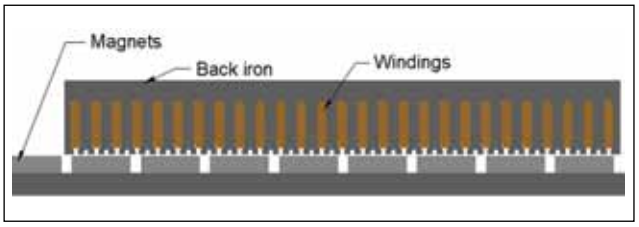

Ironcore motors consist of a forcer which rides over a single magnet rail. The forcer is made of copper windings wrapped around iron laminations. The back iron provides an efficient path for the magnetic flux to circulate between the motor and the magnet rail. In addition, there is an efficient path for heat to escape the motor.

This ironcore design allows for extremely high forces and efficient cooling. In fact, the ironcore design offers the highest force available per unit volume. Finally, the ironcore design is economically attractive because only one row of magnet material is required.

One of the drawbacks of the ironcore design is that the motor has a high attractive force between the forcer and the magnet track. The attractive force can range from 5 to 13 times the rated force of the motor. This force must be supported by the bearing system of the motor. In addition, the high attractive force makes installation more challenging than other linear motor designs.

Another drawback of the ironcore design is the presence of cogging forces. Cogging occurs when the iron laminations exert a horizontal force on the motor in order to line up with their preferred positions over the magnets. Cogging limits the smoothness of motion systems because the force generated by the motor must change with position in order to maintain a constant velocity.

Parker has developed a patented anti-cog technology that virtually eliminates cogging and allows ironcore motors to be used in applications where only ironless motors were considered before. This offers the machine builder a powerful combination of extremely high force and smooth operation in an economical package.

I-Force Ironless Motor Selection

Model	R7	R10	R16
Page	36	38	40
Cross Section – H x W mm (in)	37.5 x 70 (1.476 x 2.756)	58 x 100 (2.28 x 3.94)	58 x 160 (2.28 x 6.30)
Continuous Force – N (lbs)	462 (104)	1121 (252)	2230 (501)
Peak Force – N (lbs)	1761 (396)	4097 (921)	7435 (1671)
Maximum Track Length – mm	160 or 240	180 or 240	180 or 240
Cooling	—	—	—
Digital Hall Effect Devices	Optional	Optional	Optional

RIPPED Ironcore R7 Series

Performance*

Model	Units	R7-1	R7-2	R7-3
Peak Force 1)	N (lb)	587 (132)	1174 (264)	761 (396)
Continuous Force 2)	N (lb)	154 (35)	308 (69)	462 (104)
Peak Power	W	3600	7200	10800
Continuous Power	W	180	360	540

* Specifications are based on the maintaining the air gap between the coil and track shown in the drawings. Refer to www.parkermotion.com for motor performance curves at different air gaps. 1) Peak force and current based on 5% duty cycle and one second duration.
2) Continuous force and current based on coil winding temperature maintained at 100 ºC.

Electrical

Model	Units	R7-1	R7-2		R7-3	
Winding	Series/Parallel/Triple	**S**	**S**	**P**	**S**	**T**
Peak Current	A pk sine	29.7	29.7	59.4	29.7	89.1
	RMS	21.0	21.0	42.0	21.0	63.0
Continuous Current	A pk sine	6.6	6.6	13.2	6.6	19.8
	RMS	4.6	4.6	9.3	4.6	14.0
Force Constant 1)	N/A peak	23.2	46.4	23.2	69.6	23.2
	lb/A peak	5.2	10.4	5.2	15.6	5.2
Back EMF 2)	V/m/s	26.8	53.5	26.8	80.3	26.8
	V/in/s	0.68	1.36	0.68	2.04	0.68
Resistance @ 25°C (phase-to-phase) 3)	ohms	4.0	8.0	2.0	12.0	1.33
Inductance (phase-to-phase) 4)	mH	6.1	12.2	3.1	18.3	2.0
Electrical Time Constant 5)	ms	1.5	1.5	1.5	1.5	1.5
Motor Constant 6)	N/W	11.5	16.2	16.2	19.9	19.9
	lb/W	2.58	3.65	3.65	4.47	4.47
Terminal Voltage (max.)	VDC	330	330	330	330	330

1) The force constant gradually decreases at high current levels. At the peak current the force constant is reduced by 24%.
Refer to www.parkermotion.com for motor performance curves at different current levels. TIPS sizing software accommodates the changing force constant with current in its algorithm.
2) Back EMF measured between any two motor leads while moving at constant velocity. Value is amplitude or 0-Peak of sine wave produced.
3) Resistance measured between any two motor leads with motor connected in Delta winding at 25 ºC. For temperature at 100 ºC, multiply resistance by 1.295 (75 ºC rise * 0.393%/ºC).
4) Inductance measured using 1 Kz with the motor in the magnetic field.
5) Electrical time constant is time it takes for motor value to reach 63% of its final current after a step change in voltage.
6) Motor constant is a measure of efficiency. Calculated by dividing the force constant by the square root of the motor resistance at maximum operating temperature.

Thermal*

Model	Units	R7-1	R7-2	R7-3
Thermal Resistance Wind-Amb	°C/W	0.42	0.21	0.14
Thermal Time Constant (min.) 1)		12.7	12.7	12.7
Maximum Winding Temperature 2)	°C	100	100	100

* Use Parker's MotionSizer software for the most accurate estimate of coil temperature for a particular motion profile.
1) Thermal time constant is time it takes for motor temperature to reach 63% of its final value after a step change in power.
2) Thermal resistance is the number of degrees (Celsius) of temperature rise in the winding per watt of power dissipated determined experimentally.

Mechanical

Model	Units	R7-1	R7-2	R7-3
Coil Weight	kg (lb)	1.5 (3.3)	3.0 (6.7)	4.5 (10.0)
Coil Length	mm (in)	218.2 (8.59)	378.2 (14.89)	538.2 (21.19)
Attractive Force	N (lbf)	1557 (350)	3114 (700)	4671 (1050)
Electrical Cycle Length [1]	mm (in)	40 (1.575)	40 (1.575)	40 (1.575)

1) Electrical cycle length is distance coil must travel to complete 360º electrical cycle.

Dimensions – mm

R7 Motor Coil

	L	N	OAL	A
R7-1	190.0	8	218.2	15
R7-2	350.0	14	378.2	25
R7-3	510.0	20	538.2	35

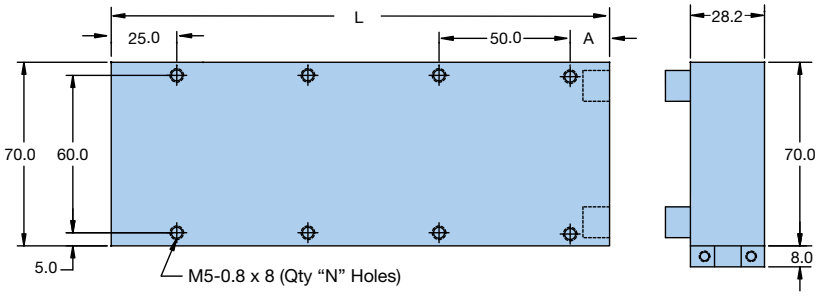

R7 Modular Track – mm

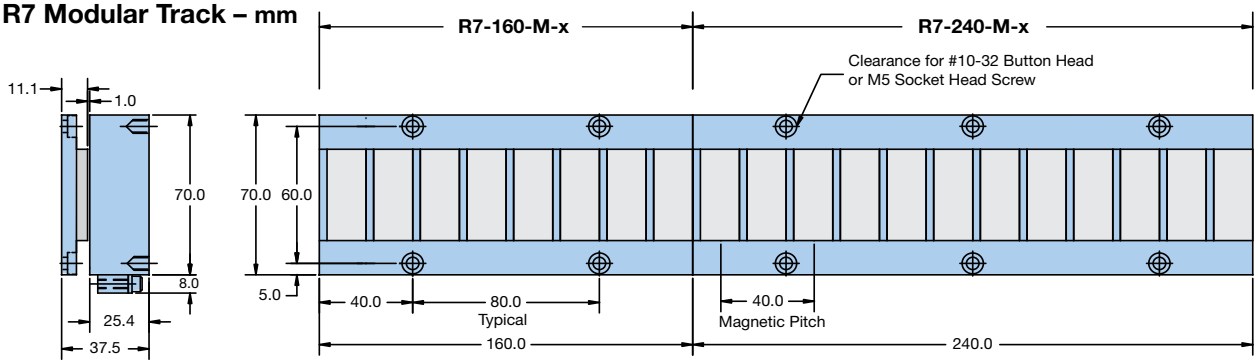

Incremental Length – mm (in)	80 (3.15)
Minimum Length – mm	160 (6.30)
Weight – kg/m (lbs/ft)	4.57 (3.08)

R7 Connector Module

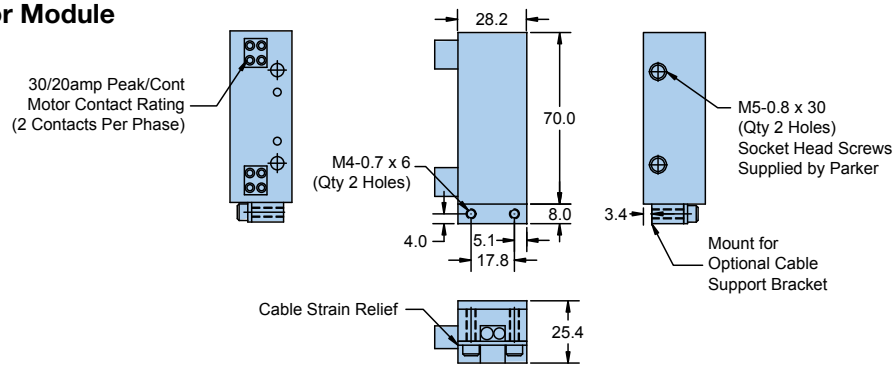

RIPPED Ironcore R10 Series

Performance*

Model	Units	R10-1	R10-2	R10-3
Peak Force 1)	N (lb)	1366 (307)	2731 (614)	4097 (921)
Continuous Force 2)	N (lb)	374 (84)	747 (168)	1121 (252)
Peak Power	W	6098	12196	18294
Continuous Power	W	305	610	915

* Specifications are based on the maintaining the air gap between the coil and track shown in the drawings. Refer to www.parkermotion.com for motor performance curves at different air gaps. 1) Peak force and current based on 5% duty cycle and one second duration.
2) Continuous force and current based on coil winding temperature maintained at 100 ºC.

Electrical

Model	Units	R10-1	R10-2		R10-3	
Winding	Series/Parallel/Triple	**S**	**S**	**P**	**S**	**T**
Peak Current	A pk sine	35.1	35.1	70.2	35.1	105.3
	RMS	24.8	24.8	49.6	24.8	74.4
Continuous Current	A pk sine	7.8	7.8	15.6	7.8	23.4
	RMS	5.5	5.5	11.0	5.5	16.5
Force Constant 1)	N/A peak	47.7	95.5	47.7	143.2	47.7
	lb/A peak	10.7	21.5	10.7	32.2	10.7
Back EMF 2)	V/m/s	55.1	110.2	55.1	165.4	55.1
	V/in/s	1.40	2.80	1.40	4.20	1.40
Resistance @ 25°C (phase-to-phase) 3)	ohms	4.1	8.2	2.05	12.3	1.36
Inductance (phase-to-phase) 4)	mH	15.4	30.8	7.7	46.2	5.1
Electrical Time Constant 5)	ms	3	3	3	3	3
Motor Constant 6)	N/W	21.4	30.3	30.3	37.1	37.1
	lb/W	4.82	6.82	6.82	8.35	8.35
Terminal Voltage (max.)	VDC	330	330	330	330	330

1) The force constant gradually decreases at high current levels. At the peak current the force constant is reduced by 24%.
Refer to www.parkermotion.com for motor performance curves at different current levels. TIPS sizing software accommodates the changing force constant with current in its algorithm.
2) Back EMF measured between any two motor leads while moving at constant velocity. Value is amplitude or 0-Peak of sine wave produced.
3) Resistance measured between any two motor leads with motor connected in Delta winding at 25 ºC. For temperature at 100 ºC, multiply resistance by 1.295 (75 ºC rise * 0.393%/ºC).
4) Inductance measured using 1 Kz with the motor in the magnetic field.
5) Electrical time constant is time it takes for motor value to reach 63% of its final current after a step change in voltage.
6) Motor constant is a measure of efficiency. Calculated by dividing the force constant by the square root of the motor resistance at maximum operating temperature.

Thermal*

Model	Units	R10-1	R10-2	R10-3
Thermal Resistance Wind-Amb	°C/W	0.24	0.12	0.08
Thermal Time Constant (min.) 1)		14.6	14.6	14.6
Maximum Winding Temperature 2)	°C	100	100	100

* Use Parker's MotionSizer software for the most accurate estimate of coil temperature for a particular motion profile.
1) Thermal time constant is time it takes for motor temperature to reach 63% of its final value after a step change in power.
2) Thermal resistance is the number of degrees (Celsius) of temperature rise in the winding per watt of power dissipated determined experimentally.

Mechanical

Model	Units	R10-1	R10-2	R10-3
Coil Weight	kg (lb)	4.5 (10.0)	9.1 (20.0)	13.6 (30.0)
Coil Length	mm (in)	305.5 (12.027)	545.5 (21.476)	785.5 (30.925)
Attractive Force	N (lbf)	3559 (800)	7117 (1600)	10675 (2400)
Electrical Cycle Length [1]	mm (in)	60 (2.362)	60 (2.362)	60 (2.362)

1) Electrical cycle length is distance coil must travel to complete 360º electrical cycle.

Dimensions – mm

R10 Motor Coil

	L	N	OAL
R10-1	275.5	8	305.5
R10-2	505.5	16	535.5
R10-3	755.5	24	785.5

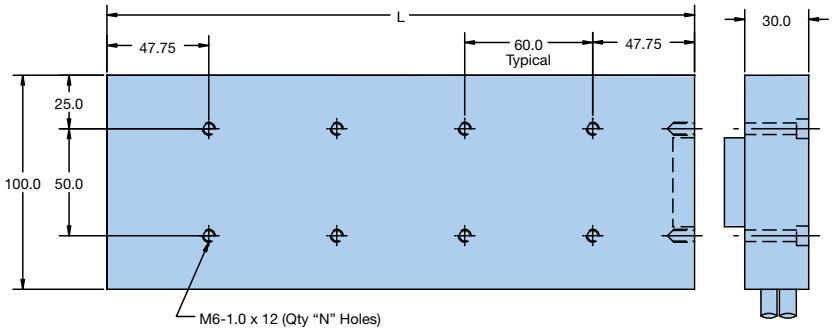

R10 Modular Track

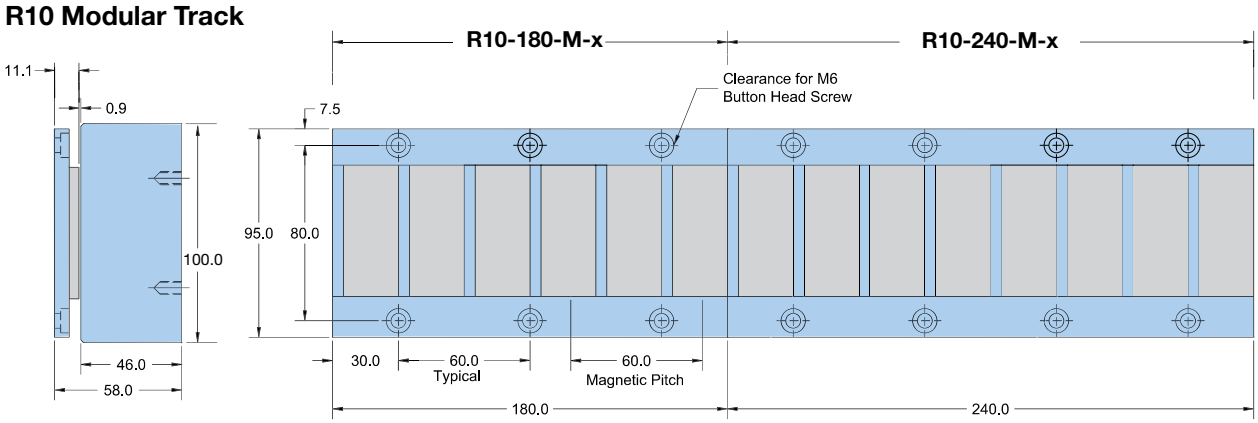

Incremental Length – mm (in)	60 (2.36)
Minimum Length – mm	180 (7.09)
Weight – kg/m (lbs/ft)	6.51 (4.38)

R10 Connector Module

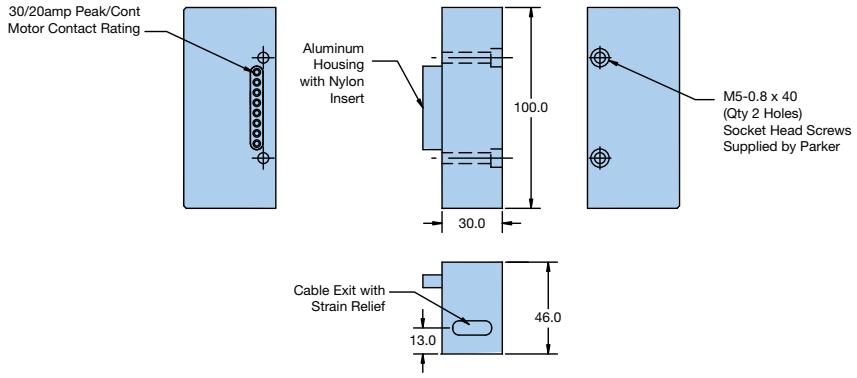

RIPPED Ironcore R16 Series

Performance*

Model	Units	R16-1	R16-2	R16-3
Peak Force 1)	N (lb)	2478 (557)	4955 (1114)	7433 (1671)
Continuous Force 2)	N (lb)	743 (167)	1487 (334)	2230 (501)
Peak Power	W	7065	14130	21195
Continuous Power	W	353	707	1060

* Specifications are based on the maintaining the air gap between the coil and track shown in the drawings. Refer to www.parkermotion.com for motor performance curves at different air gaps. 1) Peak force and current based on 5% duty cycle and one second duration.
2) Continuous force and current based on coil winding temperature maintained at 100 ºC.

Electrical

Model	Units	R16-1	R16-2		R16-3	
Winding	Series/Parallel/Triple	**S**	**S**	**P**	**S**	**T**
Peak Current	A pk sine	34.8	35.1	69.8	34.8	104.5
	RMS	24.6	24.8	49.3	24.6	73.9
Continuous Current	A pk sine	7.8	7.8	15.6	7.8	23.4
	RMS	5.5	5.5	11.0	5.5	16.5
Force Constant 1)	N/A peak	95.5	190.9	95.5	286.4	95.5
	lb/A peak	21.5	42.9	21.5	64.4	21.5
Back EMF 2)	V/m/s	110.2	220.5	110.2	330.7	110.2
	V/in/s	2.80	5.60	2.80	8.40	2.80
Resistance @ 25°C (phase-to-phase) 3)	ohms	6.1	12.2	3.05	18.3	2.0
Inductance (phase-to-phase) 4)	mH	29.0	58.0	14.5	87.0	9.7
Electrical Time Constant 5)	ms	4.8	4.8	4.8	4.8	4.8
Motor Constant 6)	N/W	39.6	55.9	55.9	68.5	68.5
	lb/W	8.89	12.57	12.57	15.40	15.40
Terminal Voltage (max.)	VDC	330	330	330	330	330

1) The force constant gradually decreases at high current levels. At the peak current the force constant is reduced by 24%.
Refer to www.parkermotion.com for motor performance curves at different current levels. TIPS sizing software accommodates the changing force constant with current in its algorithm.
2) Back EMF measured between any two motor leads while moving at constant velocity. Value is amplitude or 0-Peak of sine wave produced.
3) Resistance measured between any two motor leads with motor connected in Delta winding at 25 ºC. For temperature at 100 ºC, multiply resistance by 1.295 (75 ºC rise * 0.393%/ºC).
4) Inductance measured using 1 Kz with the motor in the magnetic field.
5) Electrical time constant is time it takes for motor value to reach 63% of its final current after a step change in voltage.
6) Motor constant is a measure of efficiency. Calculated by dividing the force constant by the square root of the motor resistance at maximum operating temperature.

Thermal*

Model	Units	R16-1	R16-2	R16-3
Thermal Resistance Wind-Amb	°C/W	0.21	0.11	0.07
Thermal Time Constant (min.) 1)		37.1	37.1	37.1
Maximum Winding Temperature 2)	°C	100	100	100

* Use Parker's MotionSizer software for the most accurate estimate of coil temperature for a particular motion profile.
1) Thermal time constant is time it takes for motor temperature to reach 63% of its final value after a step change in power.
2) Thermal resistance is the number of degrees (Celsius) of temperature rise in the winding per watt of power dissipated determined experimentally.

Mechanical

Model	Units	R16-1	R16-2	R16-3
Coil Weight	kg (lb)	9.1 (20.0)	18.2 (40.0)	27.3 (60.0)
Coil Length	mm (in)	305.5 (12.027)	545.5 (21.476)	785.5 (30.925)
Attractive Force	N (lbf)	7117 (1600)	14234 (3200)	21351 (4800)
Electrical Cycle Length [1]	mm (in)	60 (2.362)	60 (2.362)	60 (2.362)

1) Electrical cycle length is distance coil must travel to complete 360º electrical cycle.

Dimensions – mm

R16 Motor Coil

	L	N	OAL
R16-1	275.5	8	305.5
R16-2	515.5	16	545.5
R16-3	755.5	24	785.5

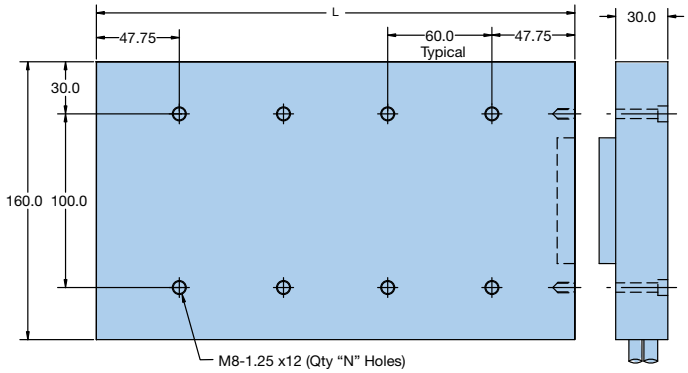

R16 Modular Track

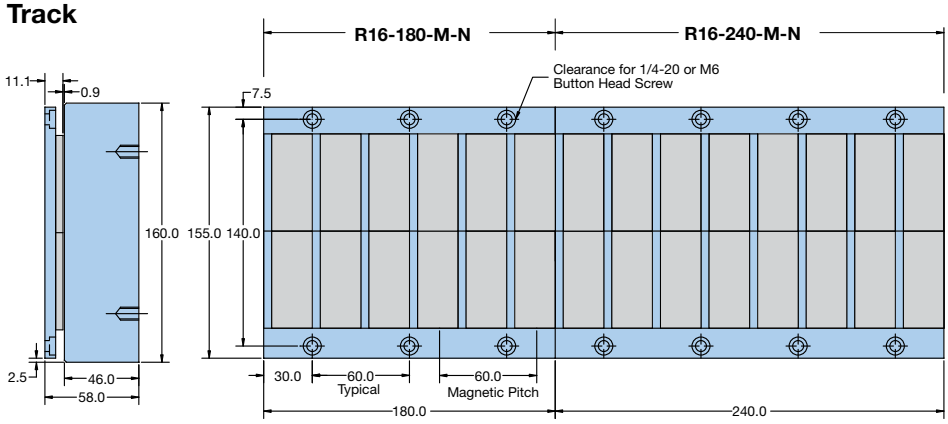

Incremental Length – mm (in)	60 (2.36)
Minimum Length – mm	180 (7.09)
Weight – kg/m (lbs/ft)	11.34 (7.60)

R16 Connector Module

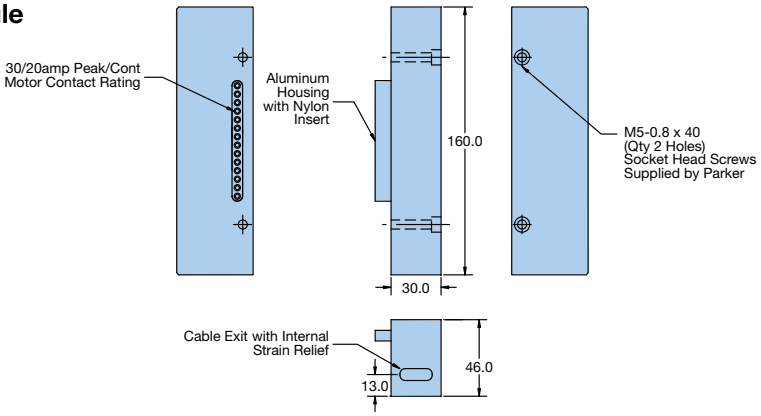

RIPPED Ironcore Linear Motors

How to order

Fill in an order code from each of the numbered fields to create a complete Motor Coil, Magnet Track and Connector Module order number.

Motor Coil

Order Example:

①		②		③		④		⑤		⑥
R10	-	2		A	-	NC	-	M		S

① **Series**
R7
R10
R16

② **Coil Size**
1 One pole
2 Two poles
3 Three poles

③ **Mounting**
A Standard

④ **Cooling***
NC No cooling
* Consult factory for water cooling options.

⑤ **Module Ready**
M Receives connector module

⑥ **Winding**
S Series
P Parallel (2-pole only)
T Triple (3-pole only)

Safety Precautions:

Use extreme caution in handling tracks. Ironcore Linear Motors contain exposed magnets and have an open magnetic field. Any ferrous metal, steel or iron, will be attracted to the magnet track. The amount of attractive force increases significantly as the distance from the magnet decreases. Severe injury may occur to fingers or hands if caught between the track and coil or other metal object.

Use extreme caution when installing the coil. The data sheet lists the attractive force between the coil and track. Refer to the "Motor Installation Guide" for proper installation instructions.

Any person with medical electronic implants should use extreme caution when near an open magnetic field.The magnetic field could interfere with the medical device's operation.

Any person working or handling the tracks should remove personal effects. Items such as jewelry, watches, keys and credit cards may be damaged or adversely affected by the magnetic field.

Magnet Track

Order Example:

①		②		③		④
R10	-	240		M	-	N

① **Series**
R7
R10
R16

② **Track Length**
160 160 mm (R7 only)
180 180 mm (R10 and R16 only)
240 240 mm (all models)

③ **Modular**
M Standard

④ **Magnet Coating**
N Nickel coating (standard)

Connector Module

Order Example:

①		②		③		④		⑤
R10	-	CM	-	R		S	-	1

① **Series**
R7
R10
R16

② **Device Description**
CM Motor connector
HED Motor connector, Digital HEDs, home and limit sensors

③ **Module Type**
R Standard

④ **Module Winding***
S Single
P Parallel
T Triple
* Must corresponds to motor coil windings.

⑤ **Cable Length**
1 1 meter (standard)
x specify length (in meters)

Linear Motor-Driven Positioners

Visit our website for more information on Parker positioner products and integrated linear motor systems

T Series Smooth Motion I-Force Ironless Positioners

The Parker T Series linear positioners utilize our high-performance ironless linear motors in a pre-engineered, easily integrated, ready-to-run package. The T Series advantages include economical cost and design flexibility to accommodate customization.

MX Series Miniature Linear Motor-Driven Positioners

Miniaturization of fiber optics, photonics, electronics and biomedical processes has driven the need for smaller and more efficient positioners. Parker's MX miniature stage, the smallest linear servo motor-driven positioner in the industry, is loaded with high-performance features for both rapid linear translation and precise positioning of lighter loads in small work envelopes.

LXR Series Precision Linear Motor-Driven Positioners

The 400LXR Series linear servo motor tables offer high acceleration, velocity, and precision with quick settling for superior throughput. Optimum performance is achieved by combining slotless linear motor technology with performance-matched feedback and mechanical elements. Offered in three widths and myriad options, the 400LXR Series can solve most high-performance applications.

TR Series High Force RIPPED Ironcore Positioners

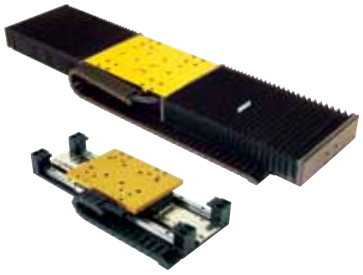

The Parker TR Series linear positioners utilize our high-performance RIPPED ironcore linear motors to produce extremely smooth motion for use in many applications where ironless motors were traditionally needed. TR positioners utilize a dual-rail-bearing design for high normal loads.

LX Compact Width Linear Motor-Driven Positioners

The LX picks up where the MX leaves off, offering longer travels while maintaining a very small profile. Like the MX, the LX is designed to meet the rigors of today's 24/7 production demands.

Although it has a small profile, the LX is large on performance and reliability. At the heart of the LX is an innovative non-contact linear servo motor. This direct drive motor has been optimized for force, speed, and acceleration to deliver outstanding performance and response.

In-Position Technologies

Complete Motion Systems

Parker's Electromechanical Automation Division brings together leading brands in industrial and high-tech automation, including Bayside, Compumotor, CTC, Custom Servo Motor, Daedal, IPS and Trilogy. Designed for easy configuration to make a complete motion system — from miniature precision for life sciences to overhead gantries for the factory floor — these best-of-breed individual components are available separately, so you can build a motion system from the ground up, or as a complete motion system to make integration simple, fast and easy.

Total System Solutions

Parker's team of highly qualified application engineers, product development engineers, and system specialists can turn pneumatic, structural and electromechanical products into an integrated system solution. Moreover, Parker's Selectable Levels of Integration™ allows you to choose the appropriate system, subsystem, or component to meet your specific need.

24/7 Emergency Breakdown Support

The Parker product information center is available any time of the day or night at 1-800-C-Parker. Parker operators will connect you with a live, on-call representative who will identify replacement parts or services for all motion technologies.

The Power of Parker

In today's competitive, fast-moving economy, what good is an application that isn't ready on time? This is especially true when compressed design cycles make the quick delivery of critical components essential. With factories strategically located on five continents, Parker offers an unrivaled delivery record, getting solutions out our door and onto your floor faster than ever.

Parker also has the industry's largest global distribution network, with more than 8,600 distributors worldwide. Each of these locations maintains ample product inventory to keep your downtime to a minimum. And many distributors have in-house design capabilities to support your system and subsystem requirements.

Throughout the design process, Parker's factory-trained electromechanical engineers work hand in hand with you and day or night at 1-800-C-Parker. Parker operators will connect you with a live, on-call representative who will identify replacement parts or services for all motion technologies.

parkermotion.com

Parker's award-winning web site is your single source for:

- **Product information**
- **Downloadable catalogs**
- **Motion-sizing software**
- **3D design files**
- **Training materials**
- **Product-configuration software**
- **RFQ capabilities**
- **Videos and application reports**

Catalog 96-028778-01 Rev B
Issue Date 12.13.10

Parker Hannifin Corporation
Electromechanical Automation Div.
5500 Business Park Drive
Rohnert Park, CA 94928 USA
www.parkermotion.com
Tel: 800-358-9070 / 707-584-7558
Fax: 707-584-8015
Email: emn_support@parker.com

Parker