LMI TECHNOLOGIES

In-Position Technologies

www.iptech1.com | (877) 478-3241 | help@iptech1.com

Gocator® 3504

3D SMART SNAPSHOT SENSOR

- PRE-CALIBRATED, 6.7 µm XY RESOLUTION 3D DATA IN A SINGLE SNAPSHOT
- ACCURATE 3D MEASUREMENT WITH BLUE LIGHT PROJECTION
- INDUSTRIAL DESIGN FOR LONG LIFE
- REMOVES COST OF LINEAR MOTION SYSTEMS AND MINIMIZES ERROR DUE TO VIBRATION

Gocator 3504 is the highest-resolution 3D snapshot sensor on the market today. Its combination of 6.7 µm XY resolution and 0.2 µm Z repeatability make this sensor ideal for detailed inline inspection of small electronic parts. An industrial stereo camera design helps see more of the part while delivering exceptional measurement stability.

HIGH ACCURACY WITH START-STOP MOTION

Gocator 3504's 5-megapixel stereo camera reduces occlusion and allows you to measure tiny features in a single snapshot, with the highest resolution and accuracy for an industrial structured light sensor on the market today.

INLINE INSPECTION READY WITH FASTER PROCESSING

Single sensors require no additional controllers or PCs to produce 3D measurements. The sensor's new dual-core controller and onboard hardware acceleration allow for inline production speeds. For time-critical applications, Gocator 3504 can be further accelerated up to 4x faster using GoMax smart vision accelerator.

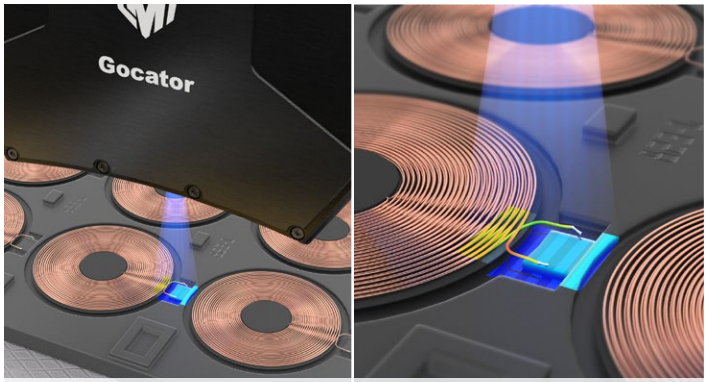

Copper coil scanning

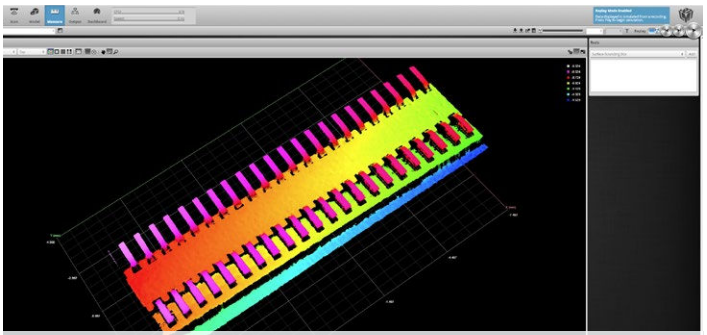

Gocator's browser-based graphical user interface

Pin inspection

GOCATOR 3504 SPECIFICATIONS

Scan Rate (Hz)	6
Imagers	5 MP, Stereo
Clearance Distance (CD) (mm)	52.5
Measurement Range (MR) (mm)	7
Field of View (mm)	12.1 x 13.2 (near) 12.7 x 16.4 (maxY) 13.0 x 15.0 (far)
Repeatability Z (µm)	0.2
Resolution XY (µm)	6.7 - 7.1
Accuracy XYZ (µm)*	6
Dimensions (mm)	49x152x177.5
Weight (kg)	1.77
Light Source	Blue LED (465 nm)
Inputs	Differential Encoder, Trigger
Outputs	2x Digital Output, RS485 Serial (115 kbaud), 1x Analog Output (4 - 20 mA)

Interface	Gigabit Ethernet
Input Voltage (Power)	+24 to +48 VDC (25 Watts); Ripple +/- 10%
Housing	Gasketed Aluminium Enclosure, IP67
Operating Temp	0 to 50 °C
Storage Temp	-30 to 70 °C
Vibration Resistance	10 to 55 Hz, 1.5 mm double amplitude in X, Y, and Z directions, 2 hours per direction
Shock Resistance	15 g, half sine wave, 11 ms, positive and negative for X, Y, and Z directions
3D Feature Tools	Openings (holes, slots), Cylinders, Studs (threaded and non-threaded), Plane
3D Volumetric Tools	Volumes, Areas, Bounding boxes, Positions (min, max, centroid), Ellipses, Orientations
Scanning Software	Browser-based GUI and open source SDK for configuration and real-time 3D visualization. Open source SDK, native drivers, and industrial protocols for integration with user applications, third-party image processing applications, robots, and PLCs.

* Based on sphere-fitting at various positions in the scan volume.

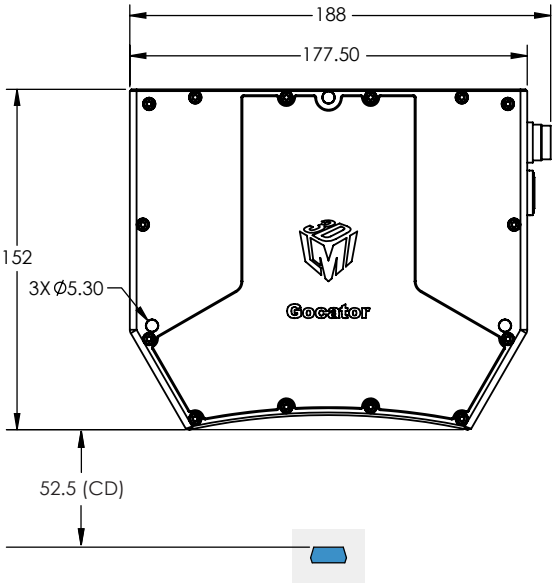

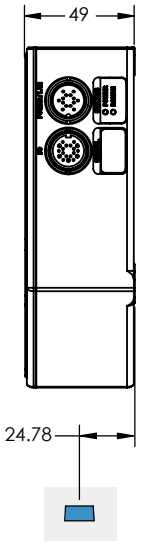

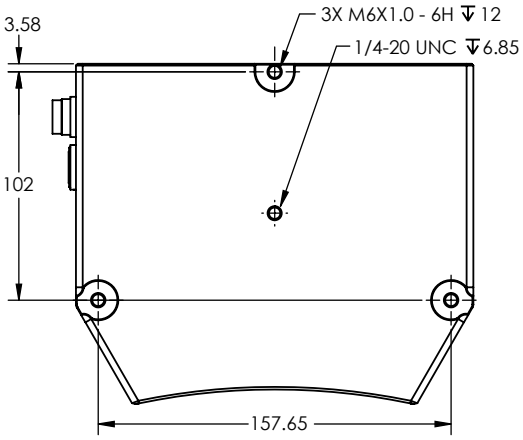

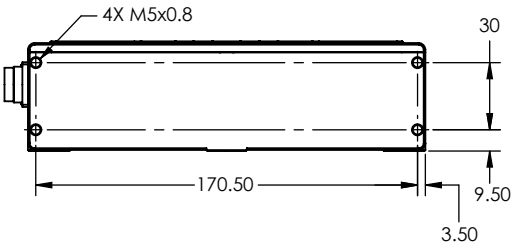

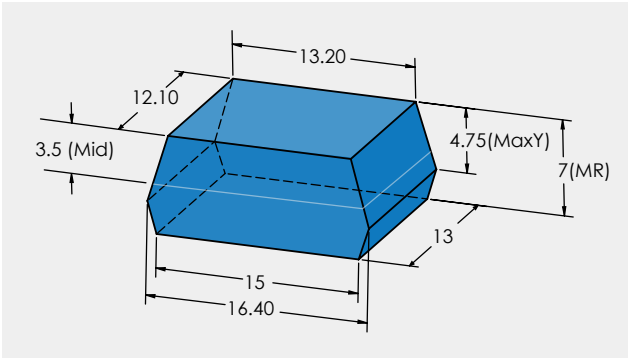

Scan volume diagram

In-Position Technologies
www.iptech1.com | (877) 478-3241 | help@iptech1.com

AMERICAS
LMI Technologies Inc.
Burnaby, BC, Canada

EMEAR
LMI Technologies GmbH
Teltow/Berlin, Germany

ASIA PACIFIC
LMI (Shanghai) Trading Co., Ltd.
Shanghai, China

LMI Technologies has sales offices and distributors worldwide. All contact information is listed at lmi3D.com/contact

©2019 LMI Technologies Inc. All rights reserved. Subject to change without notice.

LMI TECHNOLOGIES

In-Position Technologies

www.iptech1.com | (877) 478-3241 | help@iptech1.com

Gocator® 3506

3D SMART SNAPSHOT SENSOR

Gocator 3506 is the highest-resolution 3D snapshot sensor on the market. Its resolution and repeatability make it ideal for the accurate inspection of small parts such as electronic components. An excellent solution for inline factory automation, this all-in-one smart snapshot sensor offers high resolution for accurate measurements down to 12 µm* using a stereo camera and an industrial projector to deliver long lifetime and uniform lighting within the measurement volume.

- » 3D POINT CLOUDS IN A SINGLE SNAPSHOT
- » ACCURATE 3D MEASUREMENT WITH BLUE LIGHT PROJECTION
- » INDUSTRIAL DESIGN FOR LONG LIFE

* Based on VDI/VDE 2634, Part 2

Gocator 3506

HIGH ACCURACY

The sensor's stereo 5-megapixel camera lets you measure small features in a single snapshot, with the highest resolution and accuracy for an industrial structured light sensor on the market today. With snapshot sensors, the target is stationary during acquisition effectively minimizing the cost of expensive motion system components (such as encoders) and the associated errors due to vibration.

INLINE INSPECTION READY WITH FASTER PROCESSING

The sensor's new dual core controller and onboard hardware acceleration allows for inline production speeds. Using Gocator Accelerator (GoX), the Gocator 3506 runs up to 4x faster than sensor only operation to achieve inline scan rates of 3 Hz.

EASY TO USE

Gocator's built-in GUI provides an intuitive setup experience, using any web browser, computer or operating system. No additional software is required.

INDUSTRIAL PACKAGE, COMPACT, AND LIGHTWEIGHT

Gocator's rugged IP67 housing, small form factor, and light weight make it ideal for fitting into small spaces and mounting on robots.

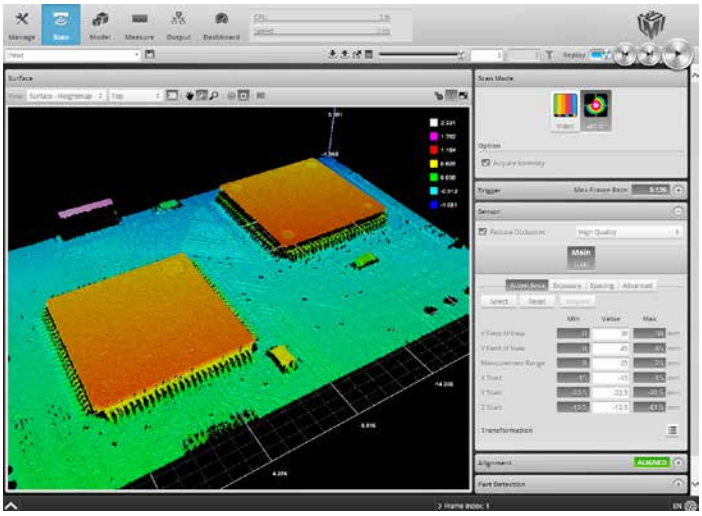

Gocator's browser-based graphical user interface showing the detail of a small electronics part

INDUSTRIAL PROJECTOR FOR LONG LIFETIME

The sensor's LED light source makes it easier to work with than lasers. The bright LED and industrial design enables shorter exposures, so you get measurements faster with an expected lifetime of up to 10 years of continuous operation.

Gocator 3506 Specifications	
Scan Rate (Hz)	3
Imagers (megapixels)	5
Clearance Distance (CD) (mm)	87.0
Measurement Range (MR) (mm)	25.0
Field of View (mm)	27.0 x 45.0 - 30.0 x 45.0
Repeatability Z (um)	2.0
Resolution XY (mm)	0.020 (CE) - 0.025 (FE)
VDI/VDE Accuracy (mm)*	0.012
Dimensions (mm)	49 x 136 x 170
Weight (kg)	1.52
Light Source	Blue LED (465 nm)
Interface	Gigabit Ethernet
Inputs	Differential Encoder, Trigger
Outputs	2x Digital Output, RS485 Serial (115 kbaud), 1x Analog Output (4 - 20 mA)
Input Voltage (Power)	+24 to +48 VDC (25 Watts); RIPPLE +/- 10%
Housing	Gasketed Aluminium Enclosure, IP67
Operating Temp	0 to 50 °C
Storage Temp	-30 to 70 °C
Vibration Resistance	10 to 55 Hz, 1.5 mm double amplitude in X, Y and Z directions, 2 hours per direction
Shock Resistance	15 g, half sine wave, 11 ms, positive and negative for X, Y and Z directions
Software and Built-in 3D Measurement Tools	
3D Feature Tools	Openings (holes, slots), Cylinders, Studs (threaded and non-threaded), Plane
3D Volumetric Tools	Volumes, Areas, Bounding boxes, Positions (min, max, centroid), Ellipses, Orientations
Scanning Software	Browser-based GUI and open source SDK for configuration and real-time 3D visualization. Open source SDK, native drivers, and industrial protocols for integration with user applications, third-party image processing applications, and PLCs.

* Based on 2634, Part 2

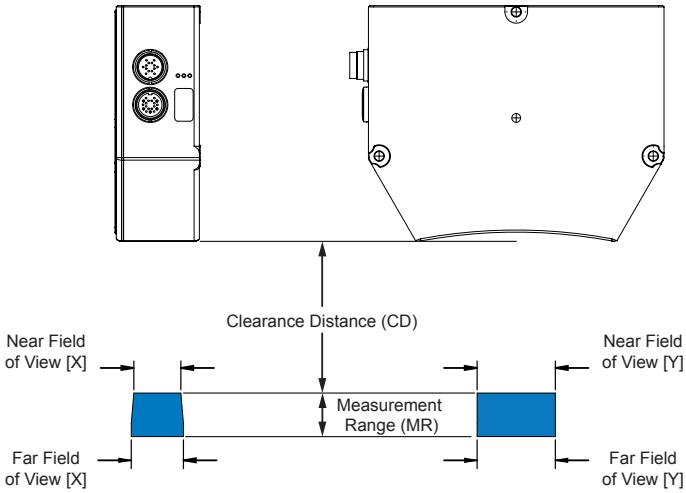

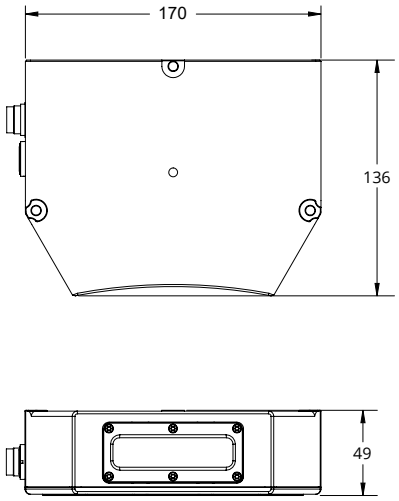

In-Position Technologies

www.iptech1.com | (877) 478-3241 | help@iptech1.com

AMERICAS
LMI Technologies Inc.
Burnaby, BC, Canada

EMEAR
LMI Technologies GmbH
Teltow/Berlin, Germany

ASIA PACIFIC
LMI (Shanghai) Trading Co., Ltd.
Shanghai, China

LMI Technologies has offices worldwide. All contact information is listed at lmi3D.com/contact

©2017 LMI Technologies Inc. All rights reserved. Subject to change without notice.